Operation Manual

Digital Power Amplifier

DPX-300S/300D/600S



inter M

Welcome

A personal welcome to you from the management and employees of Inter-M

All of the co-workers here at Inter-M are dedicated to providing excellent products with inherently good value, and we are delighted you have purchased one of our products.

We sincerely trust this product will provide years of satisfactory service, but if anything is not to your complete satisfaction, we will endeavor to make things right.

Welcome to Inter-M, and thank you for becoming part of our worldwide extended family!

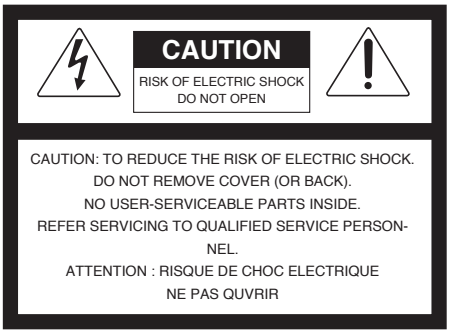



This symbol is intended to alert the user to the presence of uninsulated “dangerous voltage” within the product’s enclosure that may be of sufficient magnitude to constitute a risk of electric shock to persons.



This symbol is intended to alert the user to the presence of important operation and maintenance (servicing) instructions in the literature accompanying the appliance.

Caution: To prevent electric shock do not use this (polarized) plug with an extension cord, receptacle or other outlet unless the blades can be fully inserted to prevent blade exposure.

Attentions: Pour prévenir les chocs électriques ne pas utiliser cette fiche polarisée avec un prolongateur, une prise de courant on une autre sortie de courant, sauf si les lames peuvent étre insérées à fond sans en laisser aucune partie à découvert.
Pour deconnecter completement l’appareil du reseau d’alimentation. deconnecter le cordon d’alimentation de la prise murale.
La prise du reseau d’alimentation doit demeurer aisement accessible.

WARNING

To prevent fire or shock hazard, do not expose the unit to rain or moisture.

*WARNING FOR YOUR PROTECTION PLEASE READ THE FOLLOWING-WATER AND MOISTURE: Unit should not be used near water(e.g. near a bathtub, washbowl, kitchen sink, laundry tub, in a wet basement, or near a swimming pool, etc). Care should be taken so than objects do not fall and liquids are not spilled into the enclosure through openings.
*CLASS 2 WIRING (Adjacent to speaker terminal): The speaker output of this apparatus can exceed 10 Watts and could be a shock injury. Connection to speakers should be performed by a skilled person.
*Do not install this equipment in a confined space such as a book case or similar unit.
*Warning : To reduce the risk of fire or electric shock, do not expose this apparatus to rain or moisture and objects filled with liquids, such as vases,
should not be placed on this apparatus.
*This apparatus shall be connected to a mains socket outlet with a protective earthing connection.
*To completely disconnect this apparatus from the AC mains, disconnect the power supply cord plug from the AC receptacle.
*The mains plug of the power supply cord shall remain readily accessible.

CAUTION
*These servicing instructions are for use by qualified service personnel only. To reduce the risk of electric shock, do not perform any servicing other than that contained in the operating instructions unless you are qualified to do so.

NOTE
*This equipment has been tested and found to comply with the limits for a Class A digital device, pursuant to Part 15 of the FCC Rules. These limits are designed to provide reasonable protection against harmful interference when the equipment is operated in a commercial environment. This equipment generates, uses, and can radiate radio frequency energy and, if not installed and used in accordance with the instruction manual, may cause harmful interference to radio communications. Operation of this equipment in a residential area is likely to cause harmful interference in which case the user will be required to correct the interference at his own expense.

Contents

Unpacking 2

Installation
- Environment 2
- Important Safety Instructions 2

Features 3

Contents and Accessories 3

Front Panel 4

Rear Panel 6

Speaker Connection 8

Applications 9

Block Diagram 10

Specifications 11

Service
- Procedures 14
- Schematic 14
- Parts List 14

Variations and Options 14

Warranty 14

Unpacking

Although your DPX-300S/300D/600S is neither complicated nor difficult to operate, we recommend you take a few minutes to read this brief manual and familiarize yourself with the important information regarding product features, setup and operation.

As with most electronic devices, we strongly recommend you retain the original packaging. In the unlikely event the product must be returned for servicing, the original packaging (or reasonable equivalent) is required.

Installation

Environment
Never place this product in an environment which could alter its performance or reduce its service life. Such environments usually include high levels of heat, dust, moisture, and vibration.

IMPORTANT SAFETY INSTRUCTIONS

1. Read these instructions.
2. Keep these instructions.
3. Heed all warnings.
4. Follow all instructions.
5. Do not use this apparatus near water.
6. Clean only with dry cloth.
7. Do not block any ventilation openings. Install in accordance with the manufacturer's instructions.
8. Do not install near any heat sources such as radiators, heat registers, stoves, or other apparatus (including amplifiers) that produce heat.
9. Do not defeat the safety purpose of the polarized or grounding-type plug. A polarized plug has two blades with one wider than the other. A grounding type plug has two blades and a third grounding prong. The wide blade or the third prong are provided for your safety. If the provided plug does not fit into your outlet, consult an electrician for replacement of the obsolete outlet.
10. Protect the power cord from being walked on or pinched particularly at plugs, convenience receptacles, and the point where they exit from the apparatus.
11. Only use attachments/accessories specified by the manufacturer.
12. Use only with the cart, stand, tripod, bracket, or table specified by the manufacturer, or sold with the apparatus. When a cart is used, use caution when moving the cart/apparatus combination to avoid injury from tip-over.
13. Unplug this apparatus during lightning storms or when unused for long periods of time.
14. Refer all servicing to qualified service personnel. Servicing is required when the apparatus has been damaged in any way, such as power-supply cord or plug is damaged, liquid has been spilled or objects have fallen into the apparatus, the apparatus has been exposed to rain or moisture, does not operate normally, or has been dropped.


S3125A

Features

- **1U SIZE Class-D AMP using high output SMPS power**

- **Support for emergency broadcasting power (DC 24V)**
  In case of power failure, it can be operated with an emergency broadcast battery (DC 24V) without a separate UPS.

- **Provides various outputs and channels according to the installation environment**
  300W: DPX-300S (1CH), 600W: DPX-600S (1CH), DPX-300D (2CH)

- **Priority broadcast (PRIORITY) function**
  Output PRIORITY input signal in case of emergency

- **Status LED / Input Signal Level Meter**
  -30dB, -10dB, CLIP signal indicator, PROTECTION indicator, FAULT indicator, STBY/AC/DC indicator

- **Various protection circuits**
  Protection circuit design for amplifier overheat, output short, over input, reverse voltage, earth fault, power failure and DC output

- **AC POWER REMOTE contact**
  Set power can be turned on/off remotely using contacts

- **Audio link connector**

- **Buzzer on/off**

Contents and Accessories

1. **AC power cord x 1EA**
2. **Speaker output terminal block (varies by model)**
   - DPX-300S, DPX-600S: 2P terminal block x 1EA
   - DPX-300D : 4P terminal block x 1EA
3. **Audio input terminal block (varies by models)**
   - DPX-300S, DPX-600S: 6P terminal block x 2EA
   - DPX-300D : 6P terminal block x 3EA
4. **2P terminal block x 1EA**
5. **Rack mounting screws x 4EA**
6. **Washers x 4EA**
7. **Operation Manual x 1EA**

Front Panel

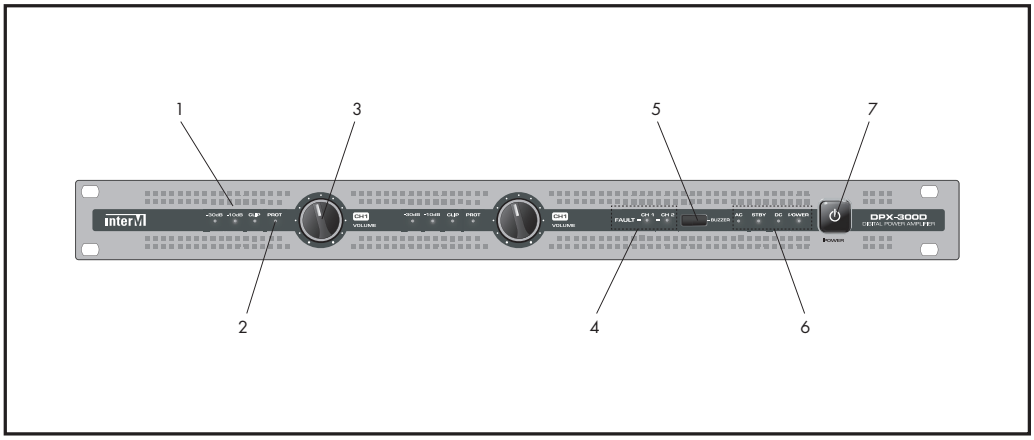

1. INPUT LEVEL INDICATOR LED

This LED indicates the level of the audio signal input to the device.
(-30dB : GREEN, -10dB : GREEN, CLIP : YELLOW)

2. AMP PROTECTION LED

This LED indicates the operation status of the amplifier's protection circuit. When the LED is on, the output is cut off.

3. VOLUME CONTROL

A volume that adjusts the signal input size. Turning it clockwise increases the volume, and turning it counterclockwise decreases the volume.

4. FAULT LED

Fault LED is on when the LINE of the amplifier output is abnormal.
(Reverse voltage/short: LED on, EARTH FAULT: LED Flash)

	FAULT LED	STATE
Reverse Voltage	ON	LED ON
Short	ON	LED ON
EARTH FAULT	ON/OFF	LED Flash

5. BUZZER ON/OFF SWITCH

A buzzer sounds when the amplifier output's LINE is abnormal. ON/OFF can be controlled with this switch.
When the switch is ON, the buzzer sounds, and when the switch is OFF, the buzzer does not sound.

6. POWER STATUS LED

This LED indicates the device's power status.

	Power SW	Power LED	AC LED	STBY LED	DC LED
AC/DC	SW ON	ON	ON	OFF	OFF
	SW OFF	OFF	OFF	ON	OFF
AC only	SW ON	ON	ON	OFF	OFF
	SW OFF	OFF	OFF	ON	OFF
DC only	SW ON	ON	OFF	OFF	ON
	SW OFF	ON	OFF	OFF	ON

7. POWER SWITCH

When the switch is pressed, the "POWER LED" is on and the device turns on.

Rear Panel

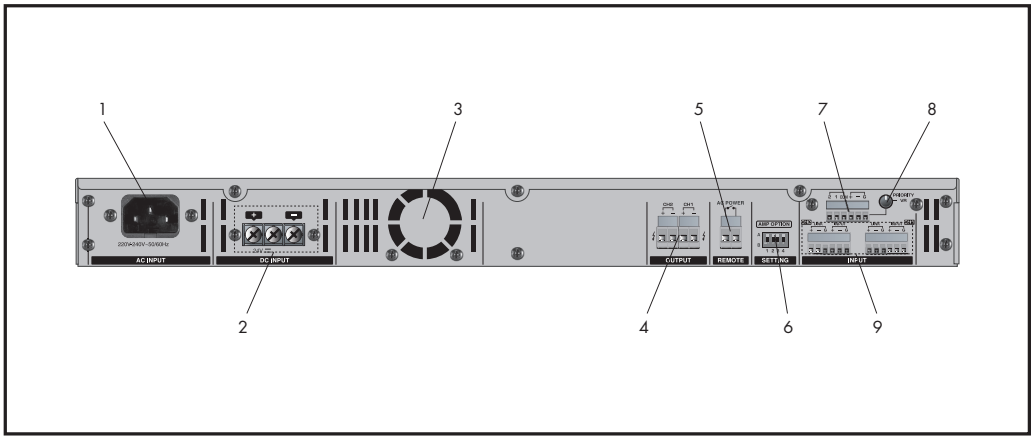

1. AC POWER INPUT TERMINAL

This is the AC power cord connector that supplies power to this device.

※ Be sure to check the rated voltage before connecting.

2. DC POWER INPUT TERMINAL

This is the terminal for connecting the emergency broadcast battery (DC 24V).

When there is no AC power connected to the device, the device will run on the connected spare battery power.

※ Be sure to check the polarity and rated voltage before connecting.

3. FAN VENTS

Air circulation passages to prevent overheating of the device.

※ Be careful not to block the vents.

4. SPEAKER OUTPUT TERMINAL

This is the speaker output terminal.

※ Be careful not to change the + and - terminals of the amplifier with the + and - terminals of the speaker.

5. AC POWER REMOTE

It is a terminal that can turn on/off the power from a long distance using the contact point of this terminal.

※ When the REMOTE contact is ON, the device's power is turned on, and when the REMOTE contact is OFF, the device's power is turned off.

※ When the front panel's POWER S/W is on, the function does not work.

6. SETTING SWITCH

It is a switch that sets the operation of the device.

1	100V/70V selector switch	A	AMP OUTPUT 100V output
		B	AMP OUTPUT 70V output
2	AMP LATCH selector switch	A	Automatic recovery when AMP PROT occurs (Auto recovery after 10-15 seconds)
		B	Manual recovery when AMP PROT occurs (POWER switch OFF/ON)
3	EARTH FAULT selector switch	A	Using the EARTH FAULT function
		B	EARTH FAULT function not used
4	EARTH FAULT output selector switch	A	Block AMP OUTPUT's output when EARTH FAULT occurs
		B	Maintain AMP OUTPUT's output when EARTH FAULT occurs

※ The SETTING switch must be set when the power switch is OFF.
If the power switch is set in the ON state, the set value is not recognized.

7. PRIORITY INPUT TERMINAL

It is a PRIORITY input terminal and consists of a balanced input and a contact input terminal.
When connecting the PRIORITY contact, the PRIORITY audio input takes priority over the input signal of each channel.

※ This can be used to configure independent priority broadcasting using an amplifier in the local area.

8. PRIORITY VR

The volume of the PRIORITY INPUT signal can be used to adjust the size of the output signal.
Turning it clockwise increases the output, turning it counterclockwise decreases the output.

※ Keep the Volume Level not too low as it is for priority broadcasting.

9. AUDIO INPUT TERMINAL

This is the audio signal input terminal connected to the amplifier.
As a balanced input, +: signal plus, -: signal minus, G: ground.

※ The terminals are linked so that each channel input can be connected to another input terminal.

Speaker Connection

When connecting a speaker, disconnect the power cord from the wall outlet and connect it to the speaker terminal on the rear panel according to the type of speaker you want to use and its connection method.

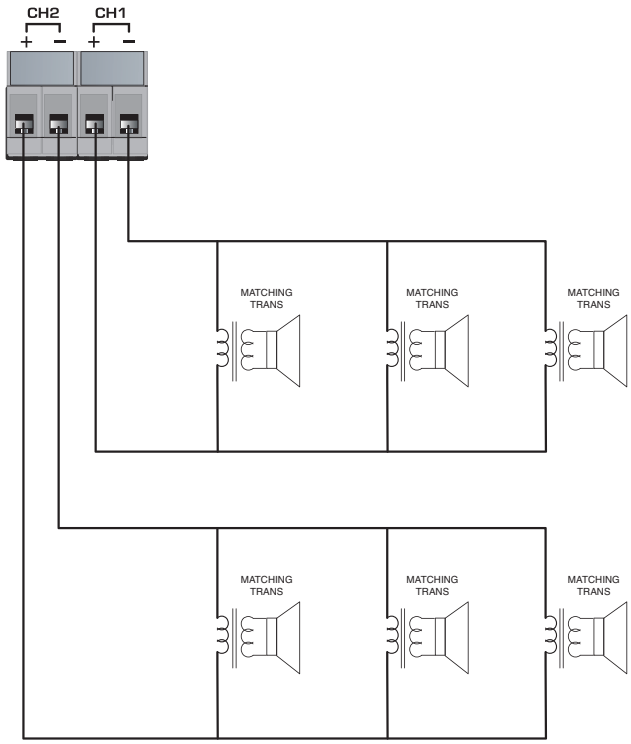

Output per channel	Model	Number of output channels	Rated Impedance
300W	DPX–300S	1	100V / 33.3Ω 70V / 16.3Ω
	DPX–300D	2	
600W	DPX–600S	1	100V / 16.6Ω 70V / 8.1Ω

※ Please install carefully so that the total impedance of the speakers to be connected is not lower than the rated impedance.

Applications

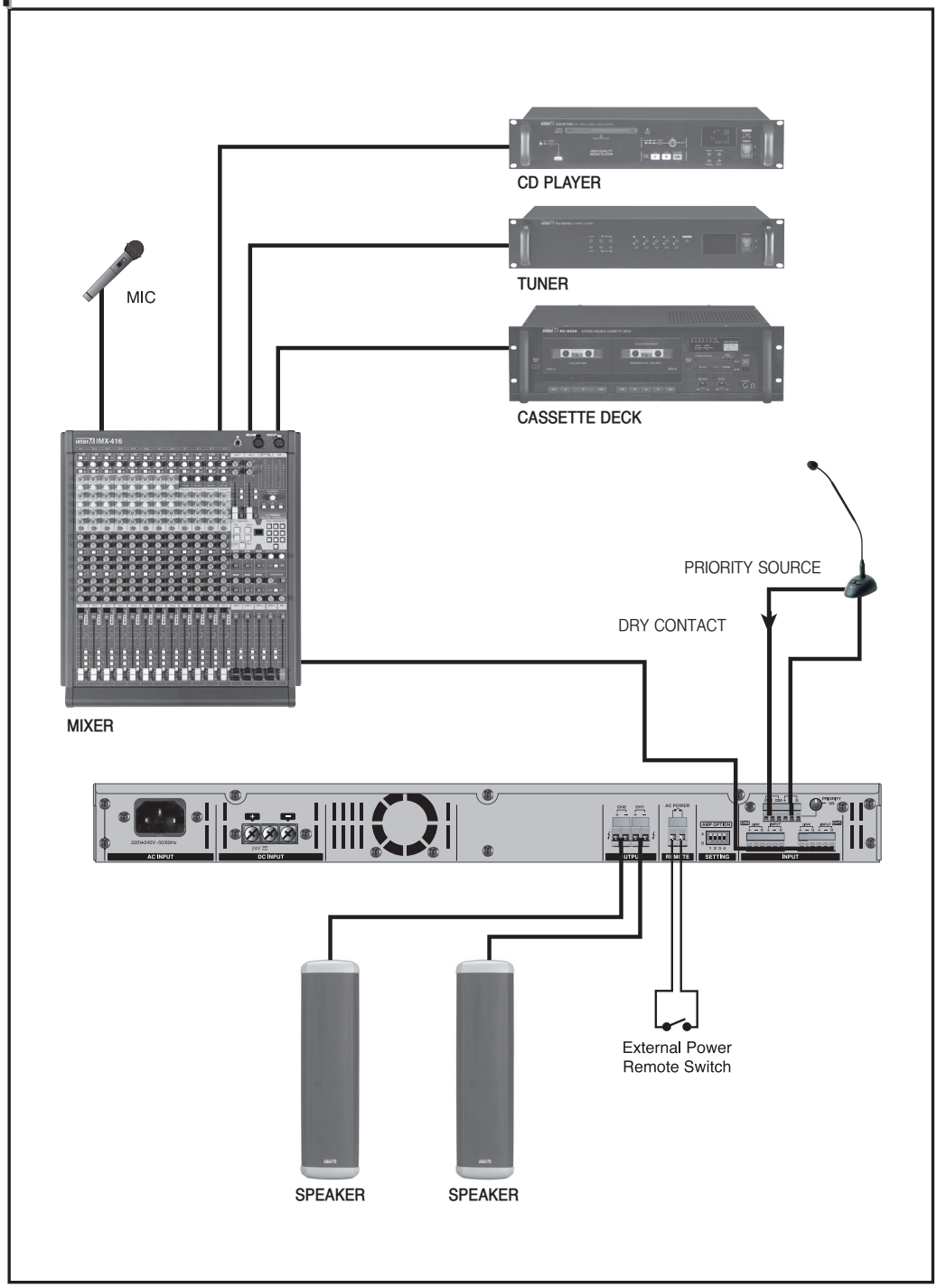

Block Diagram

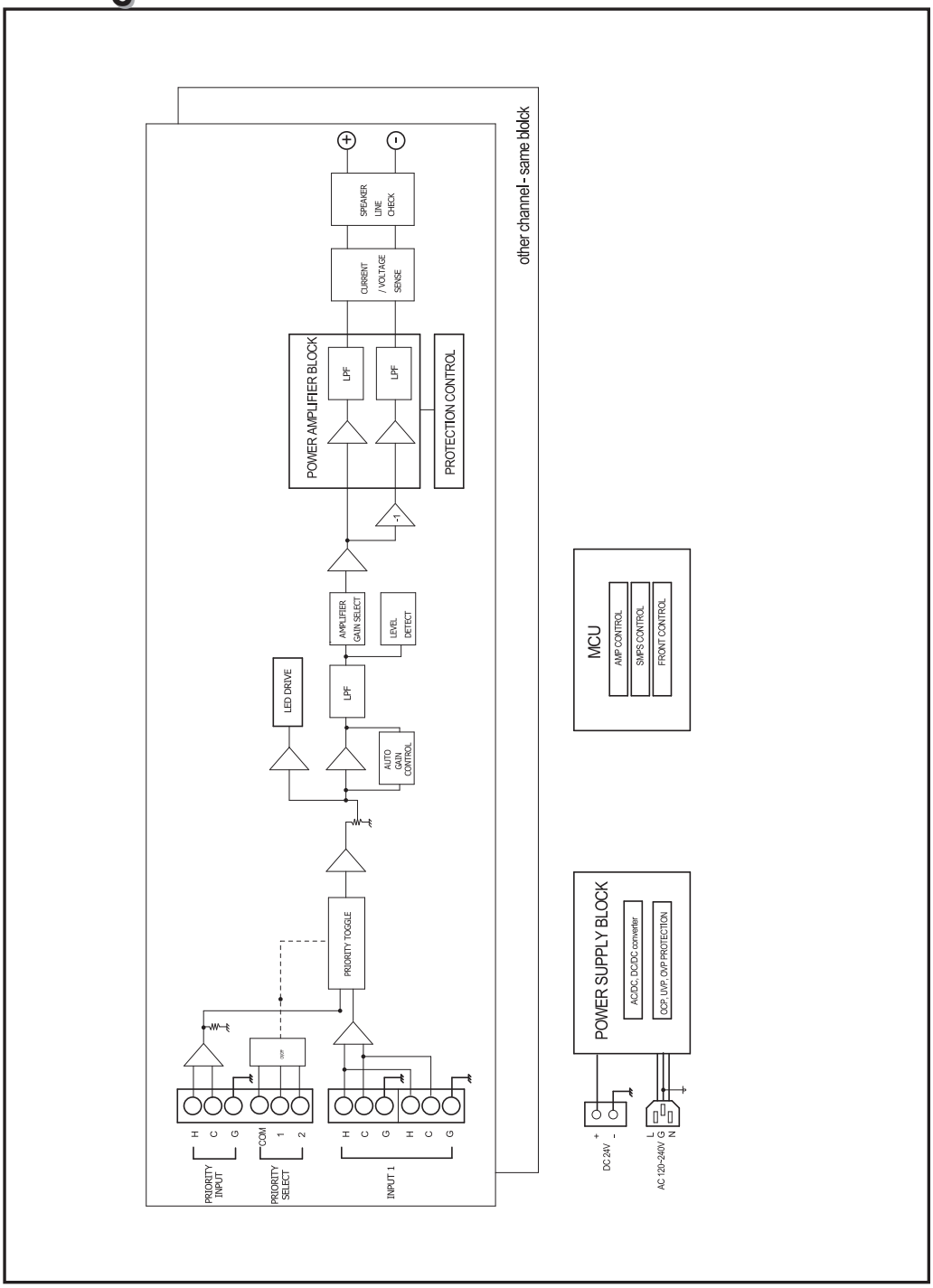

Specifications

	DPX-300S	DPX-300D	DPX-600S
Rated Output Power (70V / 100V)	300W x 1CH	300W x 2CH	600W x 1CH
Frequency Response (1W, ±3dB)	50Hz ~ 20kHz		
THD (Rated Power)	Less than 1%		
S/N (20kHz LPF, A-wtd)	More than 95dB		
Input Sensitivity/ Impedance	0dBV / 20kΩ		
Output Level/ Impedance	100V / 33.3Ω	100V / 33.3Ω	100V / 16.6Ω
	70V / 16.3Ω	70V / 16.3Ω	70V / 8.1Ω
Operating Temperature	-10℃ ~ +40℃		
Operating Power	AC 220~240V, 50/60 Hz / DC 24V		
Power Consumption (1/8 Power)	150W	150W	150W
Weight (SET)	7.3kg	7.5kg	7.3kg
Dimensions (SET)	482(W) x 44(H) x 420(D) mm		

* Design and specification are subject to be changed for the improvement of product quality without pre notice.

※ DIMENSIONS

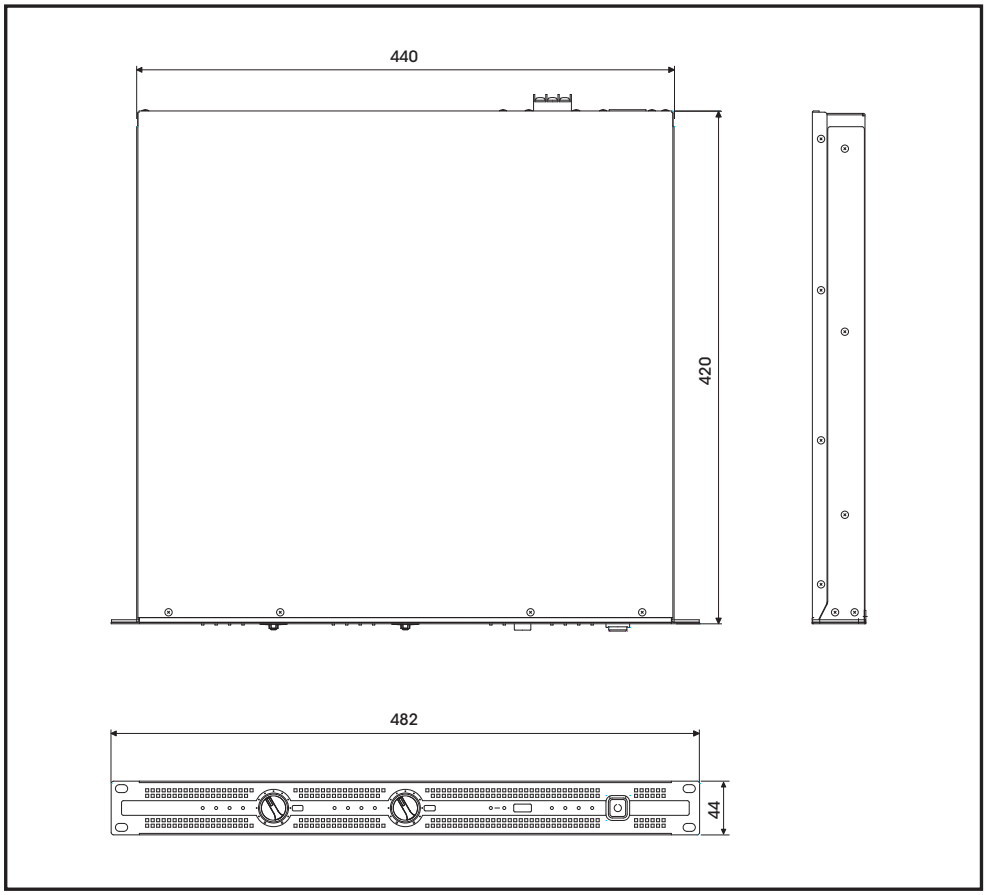

Instructions for use of screws

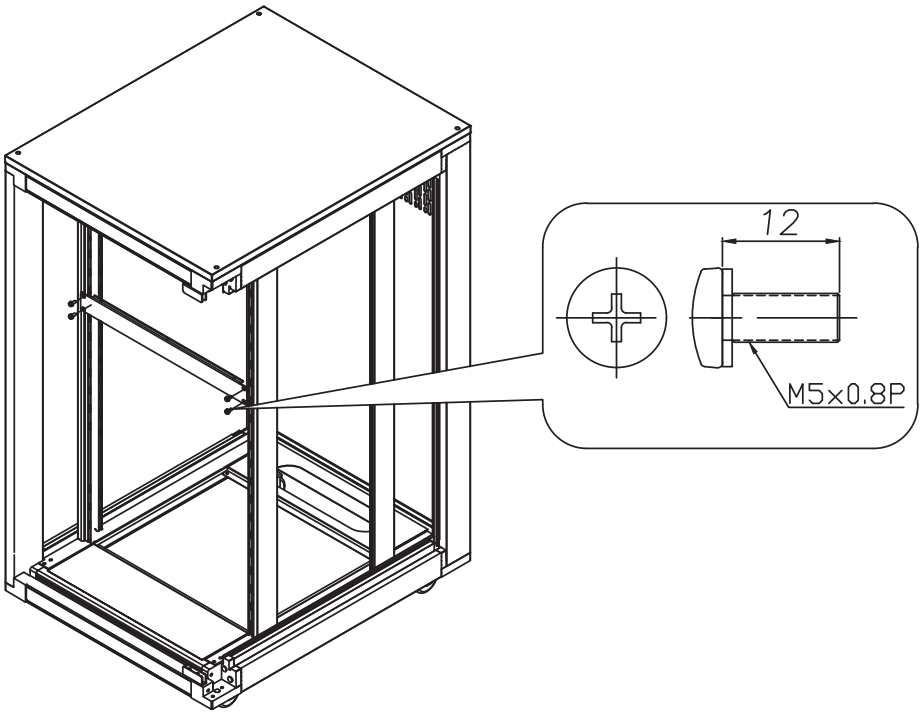

This product can be used on a table or fixed to a rack.
However, be sure to observe the installation precautions below when using it in a rack.

1. Place the product in an empty area of the rack.
2. Using the included mounting screws, tighten the 4 mounting holes so that there are no voids and fix them.
3. Please proceed with the wiring for the operation of the product, and apply the power last.
4. Disassemble in the reverse order of the above procedure.
5. In case of fixing by not using the included screws or screws of the same size, or using insufficient number of screws the manufacturer is not responsible for any safety accidents caused by this.

Accessories included for fixing the product
- Specification: SCREW M5x0.8P, L=12
- Quantity: 4pcs

Service

Procedures
Take steps to insure the problem is not related to operator error or other products within the system. Information provided in the troubleshooting portion of this manual may help with this process. Once it is certain that the problem is related to the product contact your warranty provider as described in the warranty section of this manual.

Schematic
A Schematic is available by contacting your warranty provider.

Parts List
A Parts List is available by contacting your warranty provider.

Variations and Options

Variations
Products supplied through legitimate sources are compatible with local AC power requirements.

Options
No optional items are available for this product.

Warranty

Warranty terms and conditions vary by country and may not be the same for all products. Terms and conditions of warranty for a given product may be determined first by locating the appropriate country which the product was purchased in, then by locating the product type.

To obtain specific warranty information and available service locations contact Inter-M directly or the authorized Inter-M Distributor for your specific country or region.

Inter-M, Ltd. (Korea) began operations in 1983.

Since then, Inter-M has grown to become one of the largest manufacturers
of professional audio and commercial sound electronics equipment in the world.

Inter-M has gained worldwide recognition for its own branded products,
as well as private label manufacturing of electronics sold under other names (OEM).

The company is no longer just a Korean company, but rather a global company
that is truly international in scope, with factories and offices in Korea and China,
and sales and marketing operations located in Japan, Europe, and the U.S.A.

With more than 850 employees around the globe,
Inter-M is well-poised for further growth and expansion.

Inter-M Americas, INC.
5666 CORPORATE AVE. CYPRESS, CA 90630
TEL : +1-714-828-2200, FAX : +1-714-828-2210
Home Page : http://www.inter-m.net, E-mail : info@inter-m.net

Inter-M Corporation
SEOUL OFFICE : 719, DOBONG-RO, DOBONG-GU, SEOUL, KOREA
TEL : +82-2-2289-8140~8, FAX : +82-2-2289-8149
Home Page : http://www.inter-m.com, E-mail : overseas@inter-m.com

MADE IN KOREA
March 2022 155598