Operation Manual

Multi Source Player

MSP-6142



inter M

Welcome

A personal welcome to you from the management and employees of Inter-M

All of the co-workers here at Inter-M are dedicated to providing excellent products with inherently good value, and we are delighted you have purchased one of our products.

We sincerely trust this product will provide years of satisfactory service, but if anything is not to your complete satisfaction, we will endeavor to make things right.

Welcome to Inter-M, and thank you for becoming part of our worldwide extended family!

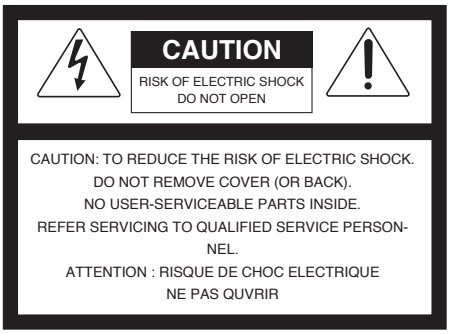



This symbol is intended to alert the user to the presence of uninsulated “dangerous voltage” within the product’s enclosure that may be of sufficient magnitude to constitute a risk of electric shock to persons.



This symbol is intended to alert the user to the presence of important operation and maintenance (servicing) instructions in the literature accompanying the appliance.

Caution: To prevent electric shock do not use this (polarized) plug with an extension cord, receptacle or other outlet unless the blades can be fully inserted to prevent blade exposure.

Attentions: Pour prévenir les chocs électriques ne pas utiliser cette fiche polarisée avec un prolongateur, une prise de courant on une autre sortie de courant, sauf si les lames peuvent étre insérées à fond sans en laisser aucune partie à découvert.
Pour deconnecter completement l’appareil du reseau d’alimentation. deconnecter le cordon d’alimentation de la prise murale.
La prise du reseau d’alimentation doit demeurer aisement accessible.

WARNING

To prevent fire or shock hazard, do not expose the unit to rain or moisture.

*WARNING FOR YOUR PROTECTION PLEASE READ THE FOLLOWING-WATER AND MOISTURE: Unit should not be used near water(e.g. near a bathtub, washbowl, kitchen sink, laundry tub, in a wet basement, or near a swimming pool, etc). Care should be taken so than objects do not fall and liquids are not spilled into the enclosure through openings.
*Do not install this equipment in a confined space such as a book case or similar unit.
*Warning : To reduce the risk of fire or electric shock, do not expose this apparatus to rain or moisture and objects filled with liquids, such as vases,
should not be placed on this apparatus.
*This apparatus shall be connected to a mains socket outlet with a protective earthing connection.
*To completely disconnect this apparatus from the AC mains, disconnect the power supply cord plug from the AC receptacle.
*The mains plug of the power supply cord shall remain readily accessible.

CAUTION
*These servicing instructions are for use by qualified service personnel only. To reduce the risk of electric shock, do not perform any servicing other than that contained in the operating instructions unless you are qualified to do so.

NOTE
*This equipment has been tested and found to comply with the limits for a Class A digital device, pursuant to Part 15 of the FCC Rules. These limits are designed to provide reasonable protection against harmful interference when the equipment is operated in a commercial environment. This equipment generates, uses, and can radiate radio frequency energy and, if not installed and used in accordance with the instruction manual, may cause harmful interference to radio communications. Operation of this equipment in a residential area is likely to cause harmful interference in which case the user will be required to correct the interference at his own expense.

Contents

Unpacking 2

Installation
- Environment 2
- Important Safety Instructions 2

Features 3

Additional Descriptions 4

Contents and Accessories 4

Front Panel 5

How to set MENU 7

Rear Panel 8

How to connect a Bluetooth (BT) device 10

How to use USB / SD CARD 10

How to use TUNER 11

How to use the front EVENT button 12

How to use the EVENT contact on the rear panel 12

How to use AUTO PLAY 13

How to connect the ANTENNA 13

Specifications 14

Service
- Procedures 16
- Schematic 16
- Parts List 16

Variations and Options 16

Warranty 16

Unpacking

Although your MSP-6142 is neither complicated nor difficult to operate, we recommend you take a few minutes to read this brief manual and familiarize yourself with the important information regarding product features, setup and operation.

As with most electronic devices, we strongly recommend you retain the original packaging. In the unlikely event the product must be returned for servicing, the original packaging (or reasonable equivalent) is required.

Installation

Environment
Never place this product in an environment which could alter its performance or reduce its service life. Such environments usually include high levels of heat, dust, moisture, and vibration.

IMPORTANT SAFETY INSTRUCTIONS

1. Read these instructions.
2. Keep these instructions.
3. Heed all warnings.
4. Follow all instructions.
5. Do not use this apparatus near water.
6. Clean only with dry cloth.
7. Do not block any ventilation openings. Install in accordance with the manufacturer's instructions.
8. Do not install near any heat sources such as radiators, heat registers, stoves, or other apparatus (including amplifiers) that produce heat.
9. Do not defeat the safety purpose of the polarized or grounding-type plug. A polarized plug has two blades with one wider than the other. A grounding type plug has two blades and a third grounding prong. The wide blade or the third prong are provided for your safety. If the provided plug does not fit into your outlet, consult an electrician for replacement of the obsolete outlet.
10. Protect the power cord from being walked on or pinched particularly at plugs, convenience receptacles, and the point where they exit from the apparatus.
11. Only use attachments/accessories specified by the manufacturer.
12. Use only with the cart, stand, tripod, bracket, or table specified by the manufacturer, or sold with the apparatus. When a cart is used, use caution when moving the cart/apparatus combination to avoid injury from tip-over.
13. Unplug this apparatus during lightning storms or when unused for long periods of time.
14. Refer all servicing to qualified service personnel. Servicing is required when the apparatus has been damaged in any way, such as power-supply cord or plug is damaged, liquid has been spilled or objects have fallen into the apparatus, the apparatus has been exposed to rain or moisture, does not operate normally, or has been dropped.


S3125A

Features

-FREE VOLT POWER
Power can be used as AC 120~240V, 50/60Hz depending on the installation environment

- PLAY MP3 / WMA /WAV
MP3 / WMA / WAV file format can be played.

- WIRELESS CONNECTION FUNCTION
Bluetooth 5.0 (Supports A2DP, AVRCP profiles and SBC, AAC codecs)

- REPEAT PLAY, RANDOM PLAY FUNCTION
The playback order of USB, SD, and Bluetooth can be played repeatedly or randomly.

- INSTANT PLAYBACK OF DESIGNATED TRACKS
It is possible to immediately play sound sources that require regular playback in various places. (Schools, churches, military bases, institutions)

- DESIGNATED TRACK SELECTION FUNCTION (AVAILABLE ONLY FOR FILES IN THE EVENT FOLDER)
It allows the selection of 10 designated tracks as the user's desired track.

- REMOTE PLAYBACK FUNCTION
Playing 10 sound sources remotely through the external contact on the back is possible.

- AUTOPLAY FUNCTION (USB, SD, TUNER ONLY)
This function automatically plays the sound source when the power of the product is turned on.

- SUPPORT SLEEP MODE
If there is no input for more than 1 minute, it goes into sleep mode.

- APPLICATION OF OLED DISPLAY
With the adoption of clear OLED, the number of the file being played, the file's name in Korean and English are displayed, and the progress position and time of the file are displayed, so the user can easily know the track's status.
The track's name moves from right to left when a track is playing.

- SUPPORTS RS-232 PORT
It supports a control port that enables remote control.

- SAVE 20 FM/AM BROADCASTING FREQUENCIES
Up to 20 station frequencies can be saved. (FM: 10 stations / AM: 10 stations)

- AUTOMATIC STATION SELECTION
Auto preset allows you to select a station automatically.

- MEMORIZE STATIONS IN CASE OF A POWER OUTAGE
Even in case of power outage, the memorized frequency is automatically recalled.

Additional Descriptions

- TUNER/RS-232

1. RS-232 PINOUT Specification

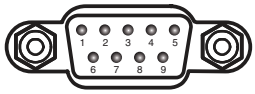

Pin	1	2	3	4	5	6~9
Purpose	Not Used	Receiver	Transmit	Not Used	Ground	Not Used

2. Controllable functions: POWER ON/OFF, BAND, TUNING DOWN/UP, PRESET DOWN/UP, 10KEY

3. Download control protocol
   You can download it by accessing the Internet homepage (www.inter-m.com).

-MEDIA/RS-232

1. RS-232 PIN OUT Specifications

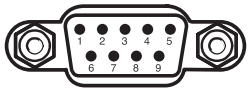

Pin	1	2	3	4	5	6–9
Usage	X	Receive	Transmit	X	Ground	X

2. Remote control functions
   PLAY/PAUSE, STOP, SKIP DOWN/UP, SEARCH DOWN/UP, etc.

Contents and Accessories

1. TERMINAL BLOCK(F) x 6Pin : 2EA, 3Pin : 1EA
2. Antenna cable (FM/AM) x 1EA
3. AC power cord x 1EA
4. Rack screw x 4EA
5. SD memory 8GB x 1EA
6. User Manual x 1EA

Front Panel

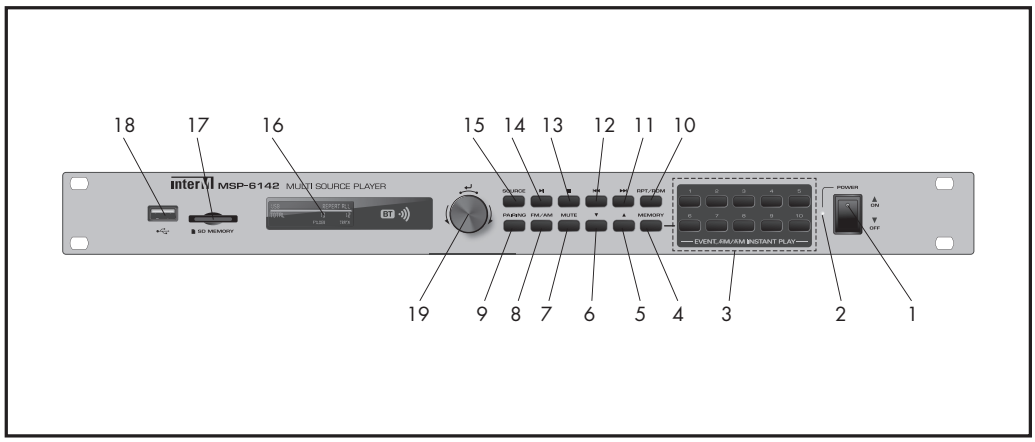

1. POWER SWITCH

This is the switch that supplies power. When the switch is turned on, the power LED turns on and the device operates.

2. POWER LED

This LED indicates the power ON/OFF status and lights up when the switch is turned ON.

3. EVENT, FM/AM INSTANT PLAY BUTTON

It is used to save the sound source to be used in the EVENT mode and select the saved sound source.
It is used to save broadcasting frequencies in TUNER mode and select the saved frequencies.

4. MEMORY BUTTON

It is used to save sound sources as numbers in EVENT mode.
It is used to save the station frequency as a number in TUNER mode.

5. UP BUTTON

It is used to increase the station frequency in TUNER mode. Press and hold to automatically increase and search. It is used to move to the upper folder in USB mode.

6. DOWN BUTTON

It is used to decrease the frequency of a broadcasting station in TUNER mode. Press and hold to decrease and search automatically. It is used to move to a subfolder in USB mode.

7. MUTE BUTTON

It is used to turn ON/OFF the TUNER output.

8. FM/AM BUTTON

It is used to select TUNER mode and select FM/AM. Every time the button is pressed, it changes in the order of FM->AM.
When selecting FM/AM, MUTE is applied automatically, so press the MUTE button to release MUTE.

9. PAIRING BUTTON

It is used when pairing devices and equipment in BT (Bluetooth) mode, and when pressed in the connected state, the connection is disconnected.(Before Connection: Not Connected, Connection Attempt: Ready to Pair, After Connection: Display Name of Connected Device)

10. RPT/RDM BUTTON (EVENT NOT APPLIED)

It is used to repeat or randomize the playback operation.
(Repeat a Selected Track, Repeat Folder → Repeat All Track → Repeat Random in a selected folder → Repeat All Random)
- Repeat Folder : Plays only the selected Folder repeatedly (SD is not applied)
- Repeat a track: Play only one track repeatedly
- Repeat Random in a selected folder : Random repeat playback within the selected folder (SD is not applied)
- Repeat All: Play all tracks repeatedly
- Repeat All Random: Randomly repeat playback of all tracks in the media

11. NEXT BUTTON (▶▶|)

Each press of the button skips forward one track.

12. PREVIOUS BUTTON (|◀◀)

Each press of the button skips back one track.

13. STOP(■) BUTTON

Button to stop playback

14. PLAY/PAUSE (▶||) BUTTON

Button to Play and Pause . Press to play, press again to pause.

15. SOURCE BUTTON

Button to switch/select a media source, and converts in the order of EVENT→USB→SD→BT.

16.OLED DISPLAY

Displays operation information and status of this device.

17. SD CARD SLOT

This is the slot to insert the SD CARD. (FAT16, FAT32 File System format only supported)
EVENT mode can be used only when the SD card is inserted.
MP3 PLAY only plays ROOT DIRECTORY files, and in EVENT mode, only files within the EVENT folder (capital letters) are played.

18. USB TERMINAL

This slot is for inserting a USB memory stick. (FAT16, FAT32 File System format only supported)

19. TUNE CONTROL

- MEDIA mode: Turn left/right to display the sound source, and press to play the selected sound source.
- TUNER MODE: Turn left/right to search for broadcasting frequencies manually.
- MENU mode: Press and hold to enter MENU and set. (Refer to page 7)

How to set MENU

1. Set the Media Volume from 0 to 30.
Adjust the volume of EVENT/USB/SD/BT.

2. Set the Tuner Volume from 0 to 30.
Adjust the volume of FM/AM.

3. Set Auto Play ON/OFF.
This is a function that automatically plays when the power of this product is turned on. (See page 15)

4. Set ON/OFF of Sleep Mode.
If it is set to ON and there is no input for more than 1 minute, it will be converted to power saving mode, and OLED will be OFF.

5. Set Reset.
If set, the saved data will be erased, and the factory default will be set.

6. Set EXIT.
Complete the MENU settings.

Rear Panel

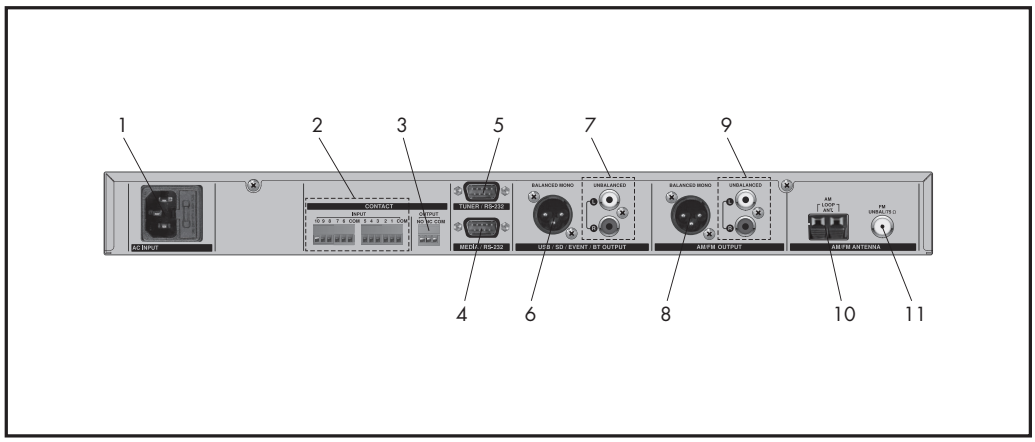

1. AC POWER INPUT (AC INLET)

This is the power supply terminal for this device.

The power fuse protects the device by cutting off the power when there is a problem with the device due to overload or malfunction. (When replacing a fuse, a fuse with the rated capacity must be used.)

2. CONTACT INPUT TERMINAL

It has the same function as the INSTANT PLAY button on the front of the product and is used for remote playback.

EVENT mode only plays the files in the EVENT folder (capital letters).

3. CONTACT OUTPUT TERMINAL

When the EVENT contact is on, the NO terminal of the contact becomes short and the NC terminal becomes open.

Conversely, when playback is finished, the NO terminal becomes open and the NC terminal becomes short.

4. MEDIA/RS-232 TERMINAL

This is the terminal connected to control MEDIA of this device remotely.

5. TUNER/RS-232 TERMINAL

This is the terminal connected to remotely control the TUNER of this device.

6. MEDIA BALANCED MONO OUTPUT

This is the terminal to connecting USB/SD/EVENT/BT balanced sound source to the input terminal of mixer or amplifier.

7. MEDIA UNBALANCED OUTPUT

This is the terminal to connecting an unbalanced sound source of USB/SD/EVENT/BT to the input terminal of a mixer or amplifier.

8. TUNER BALANCED MONO OUTPUT

This is the terminal to the balanced sound source of TUNER FM/AM to the input terminal of a mixer or amplifier for use.

9. TUNER UNBALANCED OUTPUT

This is the terminal to the unbalanced sound source of TUNER FM/AM to the input terminal of a mixer or amplifier.

10. AM ANTENNA CONNECTION TERMINAL

This is the terminal to connect the supplied LOOP AM antenna.

11. FM ANTENNA CONNECTION TERMINAL

This is the terminal to connect the provided FM antenna, and if there is noise, you can connect a 75Ω coaxial cable depending on the type.

How to connect a Bluetooth (BT) device

1. Select BT mode with the SOURCE button.
Displayed as "Not Connected" on the OLED.

2. Search for Bluetooth devices with the PAIRING button.
Displayed as "Ready to pair" on the OLED.

3. Select "MSP-6142" on the Bluetooth device.
Displayed as "Bluetooth device name" on the OLED.
*Only one Bluetooth device can be connected.
*The longer the distance, the weaker the receiving sensitivity.

How to use USB / SD CARD

1. When USB or SD CARD is selected with the SOURCE button, TRACK information is displayed on the display window.
* According to the selection, SD, USB text is displayed in the upper left corner
*If there is no media, NO CARD, NO USB message is displayed
* If there is no file, NO FILE message is displayed

2. Select a sound source with the SKIP UP/DOWN button or turn the tune controller left/right to select a sound source.

3. The selected sound source is played by pressing the PLAY/PAUSE button or the tune control.

4. If you press the PLAY/PAUSE button during playback, it pauses, and if press it once more, it resumes playback.

5. If press the SKIP UP/DOWN button during playback, the next or previous sound source is played.

6. During playback, turn the tune control left/right to select a sound source and press the tune control to play the sound source.

7. Press the STOP button to stop playback.

How to use TUNER

1. Press the FM/AM button to select TUNER mode.
When selecting FM/AM, MUTE is applied automatically, so press the MUTE button to release MUTE.

2. Select a frequency band with the FM/AM button.

3. Press the UP / DOWN button briefly to select the frequency want, or turn the tune control left/right to manually select the frequency. ← Manual tuning
* When a frequency is selected, "TUNED" is displayed on the display

4. If press and hold the UP / DOWN button, it becomes automatic station selection and the frequency that can be received is automatically selected. ← Automatic station selection

5. Save broadcast frequency INSTANT number
FM: 10 stations, AM: 10 stations can be stored
*Select the desired frequency manually or automatically.
*Press the MEMORY button.
*"MEMO" is displayed for about 10 seconds, and "MOME" mode is automatically released if there is no input for more than 10 seconds.
*INSTANT Select the number to save with the number buttons (1 to 10) and it will be saved.

6. Load saved broadcasting channels
Call up the broadcasting frequency stored in *INSTANT with the number buttons (1~10).

How to use the front EVENT button

1. How to add a sound source
 # USB does not support EVENT mode.
  *Create an EVENT folder (capital letters) on the SD-CARD and add the sound source to use.
 # By default, a track number (1 to 10) is assigned to the number of the EVENT button.

2. Play/stop function of assigned track
 *Select the EVENT mode with the SOURCE button.
 # It is displayed as "STOP" mode at the beginning of EVENT.
  * Play the EVENT with the number buttons on INSTANT PLAY.
 # The EVENT number, track title, and playing time are displayed.
 # If there is no sound source, "NO FILE" is displayed.
  * Stop playback with the STOP button.

3. Save the designated track INSTANT number
  *Select the EVENT mode with the SOURCE button.
  *Select a track with the SKIP button or tune control.
  *"MEMO" is displayed for about 10 seconds, and "MOME" mode is automatically released if there is no input for more than 10 seconds.
  *INSTANT Select the number to save with the number buttons (1 to 10) and it will be saved.

How to use the EVENT contact on the rear panel

1. It has the same function as the INSTANT PLAY button on the front of the product and is used for remote playback.

2. The sound source must be stored in the INSTANT number.
 # If there is no stored sound source, "NO FILE" is displayed.
 # Only files in the EVENT folder are played.

3. When a contact occurs, the sound source of the corresponding INSTANT number is played.
 # If the same contact occurs during playback, playback stops.

4. If another contact occurs during playback, the sound source of the corresponding INSTANT number is played.

How to use AUTO PLAY

When the AUTO PLAY setting is turned ON and the power of the device is turned ON, USB, SD and TUNER sound sources are automatically output.
(AUTO PLAY is not applied to EVENT and BT.)

1. USB, SD mode: When the power is turned on, the corresponding sound source is played from the beginning.
If turn on the power without USB or SD, the phrase "NO USB" or "NO CARD" is displayed.

2. TUNER mode: When the power is turned on, "MUTE" is released from FM/AM tuning and the sound source is output.

How to connect the ANTENNA

1. Antenna for FM frequency reception
Due to the nature of radio waves of FM broadcasts, they become weak in valleys, near buildings, and inside steel-reinforced buildings. Install the antenna considering the surrounding conditions and radio wave strength.

2. Installation of FM antenna
Connect the FM dedicated antenna to the antenna terminal, and while listening to the broadcast, determine the installation location and direction and fix it so that the receiving sensitivity is good. Noise may occur even when using an FM-only antenna in areas with heavy traffic, downtown areas, factories, or near high-voltage transmission lines. In these areas, connect the FM antenna to an outdoor antenna using a 75Ω coaxial cable.

3. AM LOOP antenna
Connect the AM LOOP antenna to the antenna terminal and move the antenna to ensure good reception. If reception is still poor, connect the AM antenna (vinyl coated wire) to the antenna terminal.

4. AM LEAD antenna
Attach a single vinyl-coated cable about 6 to 8 m long to the AM terminal on one end and install it on a high place such as a wall.
If the reception sensitivity is not good even if the LEAD antenna is installed indoors, connect the vinyl-covered cable outdoors.

5. AM outdoor antenna
If the reception sensitivity is not good even if the LEAD antenna is installed indoors, connect the vinyl-covered cable outdoors.

Specifications

		MSP-6142
USB/SD	Formats	MP3, WMA, WAV
	Frequency Response	20 Hz to 20 kHz
	Total Harmonic Distortion (THD)	Less than 0.15%
	Signal-to-noise ratio (S/N)	More than 80dB
	Rated audio output level	6dBV
Bluetooth	Version	5.0
	Profile	A2DP, AVRCP
	Codec	SBC, AAC
FM	Receive frequency range	87.5 ~ 108MHz
	Sensitivity	Less than 25dB
	Total Harmonic Distortion (THD)	Less than 1%
	Signal-to-noise ratio (S/N)	More than 50dB
	Rated audio output level	0dBV
AM	Receive frequency range	522 ~ 1,629kHz
	Sensitivity	Less than 86dB
	Total Harmonic Distortion (THD)	Less than 3%
	Signal-to-noise ratio (S/N)	More than 30dB
	Rated audio output level	-10dBV
Operating temperature		-10℃ ~ +40℃
Power Source		AC 120-240V, 50/60Hz
Power Consumption		12W
weight (set)		2.8kg
Dimensions (set)		482(W)x44(H)x280(D)mm

* Design and specification are subject to be changed for the improvement of product quality without pre notice.

Instructions for use of screws

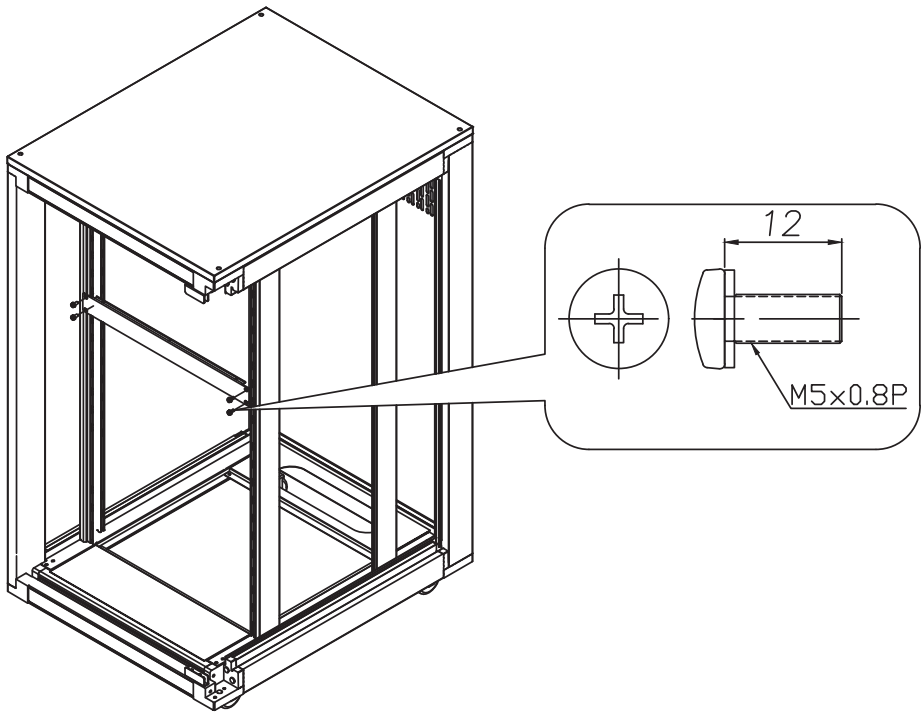

This product can be used on a table or fixed to a rack.
However, be sure to observe the installation precautions below when using it in a rack.

1. Place the product in an empty area of the rack.
2. Using the included mounting screws, tighten the 4 mounting holes so that there are no voids and fix them.
3. Please proceed with the wiring for the operation of the product, and apply the power last.
4. Disassemble in the reverse order of the above procedure.
5. In case of fixing by not using the included screws or screws of the same size, or using insufficient number of screws the manufacturer is not responsible for any safety accidents caused by this.

Accessories included for fixing the product
- Specification: SCREW M5x0.8P, L=12
- Quantity: 4pcs

Service

Procedures
Take steps to insure the problem is not related to operator error or other products within the system. Information provided in the troubleshooting portion of this manual may help with this process. Once it is certain that the problem is related to the product contact your warranty provider as described in the warranty section of this manual.

Schematic
A Schematic is available by contacting your warranty provider.

Parts List
A Parts List is available by contacting your warranty provider.

Variations and Options

Variations
Products supplied through legitimate sources are compatible with local AC power requirements.

Options
No optional items are available for this product.

Warranty

Warranty terms and conditions vary by country and may not be the same for all products. Terms and conditions of warranty for a given product may be determined first by locating the appropriate country which the product was purchased in, then by locating the product type.

To obtain specific warranty information and available service locations contact Inter-M directly or the authorized Inter-M Distributor for your specific country or region.

EAC

Inter-M, Ltd. (Korea) began operations in 1983.

Since then, Inter-M has grown to become one of the largest manufacturers of professional audio and commercial sound electronics equipment in the world.

Inter-M has gained worldwide recognition for its own branded products, as well as private label manufacturing of electronics sold under other names (OEM).

The company is no longer just a Korean company, but rather a global company that is truly international in scope, with factories and offices in Korea and China, and sales and marketing operations located in Japan, Europe, and the U.S.A.

With more than 850 employees around the globe,
Inter-M is well-poised for further growth and expansion.

Inter-M Corporation
SEOUL OFFICE : 719, DOBONG-RO, DOBONG-GU, SEOUL, KOREA
TEL : +82-2-2289-8140~8, FAX : +82-2-2289-8149
Home Page : http://www.inter-m.com, E-mail : overseas@inter-m.com

MADE IN KOREA
January 2025