# Operation Manual

Digital Power Amplifier

## DPN Series



inter M

# Welcome

**A personal welcome to you from the management and employees of Inter-M**

All of the co-workers here at Inter-M are dedicated to providing excellent products with inherently good value, and we are delighted you have purchased one of our products.

We sincerely trust this product will provide years of satisfactory service, but if anything is not to your complete satisfaction, we will endeavor to make things right.

Welcome to Inter-M, and thank you for becoming part of our worldwide extended family!

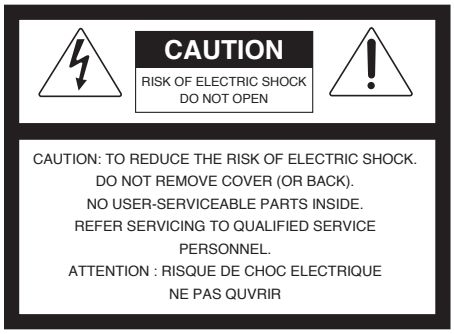




This symbol is intended to alert the user to the presence of uninsulated “dangerous voltage” within the product’s enclosure that may be of sufficient magnitude to constitute a risk of electric shock to persons.



This symbol is intended to alert the user to the presence of important operation and maintenance (servicing) instructions in the literature accompanying the appliance.

Caution: To prevent electric shock do not use this (polarized) plug with an extension cord, receptacle or other outlet unless the blades can be fully inserted to prevent blade exposure.

Attentions: Pour prévenir les chocs électriques ne pas utiliser cette fiche polarisée avec un prolongateur, une prise de courant on une autre sortie de courant, sauf si les lames peuvent étre insérées à fond sans en laisser aucune partie à découvert.
Pour deconnecter completement l’appareil du reseau d’alimentation. deconnecter le cordon d’alimentation de la prise murale.
La prise du reseau d’alimentation doit demeurer aisement accessible.

**WARNING**

To prevent fire or shock hazard, do not expose the unit to rain or moisture.

*WARNING FOR YOUR PROTECTION PLEASE READ THE FOLLOWING-WATER AND MOISTURE: Unit should not be used near water(e.g. near a bathtub, washbowl, kitchen sink, laundry tub, in a wet basement, or near a swimming pool, etc). Care should be taken so than objects do not fall and liquids are not spilled into the enclosure through openings.
*CLASS 2 WIRING (Adjacent to speaker terminal): The speaker output of this apparatus can exceed 10 Watts and could be a shock injury. Connection to speakers should be performed by a skilled person.
*Do not install this equipment in a confined space such as a book case or similar unit.
*Warning : To reduce the risk of fire or electric shock, do not expose this apparatus to rain or moisture and objects filled with liquids, such as vases,
should not be placed on this apparatus.
*This apparatus shall be connected to a mains socket outlet with a protective earthing connection.
*To completely disconnect this apparatus from the AC mains, disconnect the power supply cord plug from the AC receptacle.
*The mains plug of the power supply cord shall remain readily accessible.

**CAUTION**

*These servicing instructions are for use by qualified service personnel only. To reduce the risk of electric shock, do not perform any servicing other than that contained in the operating instructions unless you are qualified to do so.

**NOTE**

*This equipment has been tested and found to comply with the limits for a Class A digital device, pursuant to Part 15 of the FCC Rules. These limits are designed to provide reasonable protection against harmful interference when the equipment is operated in a commercial environment. This equipment generates, uses, and can radiate radio frequency energy and, if not installed and used in accordance with the instruction manual, may cause harmful interference to radio communications. Operation of this equipment in a residential area is likely to cause harmful interference in which case the user will be required to correct the interference at his own expense.

# Contents

**Unpacking** ..... 2

**Installation**
- Environment ..... 2
- Important Safety Instructions ..... 2

**Features** ..... 3

**Contents and Accessories** ..... 3

**Front Panel** ..... 4

**Rear Panel** ..... 6

**System Connection** ..... 11

**Block Diagram** ..... 12

**Specifications** ..... 13

**Service**
- Procedures ..... 15
- Schematic ..... 15
- Parts List ..... 15

**Variations and Options** ..... 15

**Warranty** ..... 15

# Unpacking

Although your DPN SERIES is neither complicated nor difficult to operate, we recommend you take a few minutes to read this brief manual and familiarize yourself with the important information regarding product features, setup and operation.

As with most electronic devices, we strongly recommend you retain the original packaging. In the unlikely event the product must be returned for servicing, the original packaging (or reasonable equivalent) is required.

# Installation

**Environment**
Never place this product in an environment which could alter its performance or reduce its service life. Such environments usually include high levels of heat, dust, moisture, and vibration.

# IMPORTANT SAFETY INSTRUCTIONS

1. Read these instructions.
2. Keep these instructions.
3. Heed all warnings.
4. Follow all instructions.
5. Do not use this apparatus near water.
6. Clean only with dry cloth.
7. Do not block any ventilation openings. Install in accordance with the manufacturer's instructions.
8. Do not install near any heat sources such as radiators, heat registers, stoves, or other apparatus (including amplifiers) that produce heat.
9. Do not defeat the safety purpose of the polarized or grounding-type plug. A polarized plug has two blades with one wider than the other. A grounding type plug has two blades and a third grounding prong. The wide blade or the third prong are provided for your safety. If the provided plug does not fit into your outlet, consult an electrician for replacement of the obsolete outlet.
10. Protect the power cord from being walked on or pinched particularly at plugs, convenience receptacles, and the point where they exit from the apparatus.
11. Only use attachments/accessories specified by the manufacturer.
12. Use only with the cart, stand, tripod, bracket, or table specified by the manufacturer, or sold with the apparatus. When a cart is used, use caution when moving the cart/apparatus combination to avoid injury from tip-over.
13. Unplug this apparatus during lightning storms or when unused for long periods of time.
14. Refer all servicing to qualified service personnel. Servicing is required when the apparatus has been damaged in any way, such as power-supply cord or plug is damaged, liquid has been spilled or objects have fallen into the apparatus, the apparatus has been exposed to rain or moisture, does not operate normally, or has been dropped.


S3125

# Features

**- CLASS-D AMPLIFIER, SWITCH MODE POWER SUPPLY (SMPS) TECHNOLOGY**
The protection circuit fully protects the device against overheating amps, power shortages, overloads, power-related malfunctions, and DC output.

**- EMERGENCY POWER BACK UP (24VDC) CAPABILITY**
The unit operates on a DC 24V battery power supply for emergency backup.

**- SYSTEM CONNECTION WITH EVAMATRIX, RM-VA1000**
DPN series consist with EVAMATRIX and RM-VA1000 as a system.

**- PROVIDING VARIOUS OUTPUT AND CHANNEL ACCORDING TO WORKING ENVIRONMENT**
240W: DPN-240S (1CH), DPN-240D (2CH), DPN-240Q (4CH)
480W: DPN-480S (1CH), DPN-480D (2CH)

**- USER SETTING ON THE WEBPAGE**
EVAMATRIX connection, configuration and update are available on the web.

**- Dante™ GIGABIT ETHERNET**
It supports Dante™ Gigabit network.

**- MULTIPLE IN/OUTPUT CONTACTS**
The series support various in/output contacts for EVAMATRIX.

**- LED INDICATOR / LEVEL METER**
Working status and fault are monitored and detected in real time.

**- LINE CHECK / EARTH FAULT FOR AMP PROTECTION**
Status of speaker lines is monitored for quality.

# Contents and Accessories

1. **AC Power Cord x 1EA**
2. **Speaker Output Terminal Block (Depending upon model)**
   - **DPN-240S, DPN-480S: 4P Terminal Block x 1EA**
   - **DPN-240D, DPN-480D: 4P Terminal Block x 2EA**
   - **DPN-240Q: 4P Terminal Block x 4EA**
3. **2P Terminal Block x 1EA**
4. **8P Terminal Block x 2EA**
5. **3P Terminal Block x 4EA**
6. **Screws for Rack mount Bracket x 4EA**
7. **Washer x 4EA**
8. **Operation Manual x 1EA**
   Operation manual of webpage can be downloaded at http://www.inter-m.net.

# Front Panel

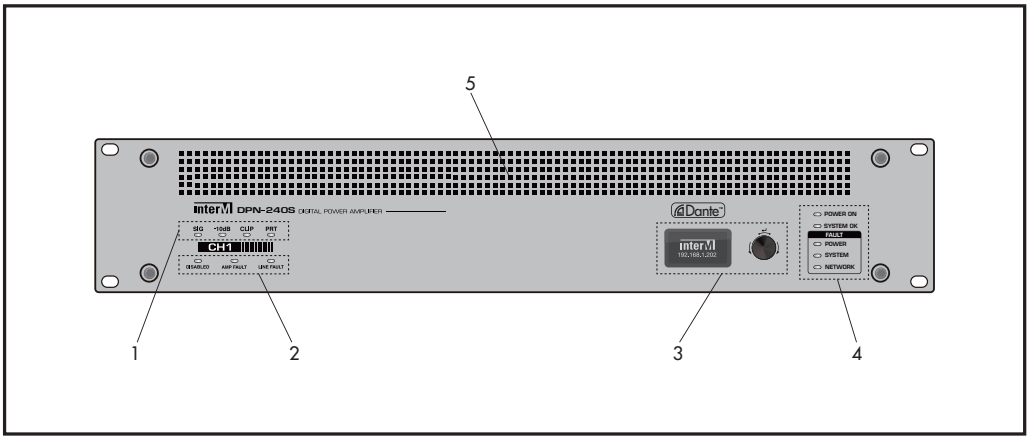


**1. INPUT LEVEL METER & PROTECTION CIRCUIT OPERATION LED**

LED that displays the level of the audio signal input to device.

| Indicator LED | | Description and operating conditions |
|---|---|---|
| Type | LED | |
| SIG | GREEN | Audio Input Signal > -30dBV |
| -10dB | GREEN | Audio Input Signal > -10dBV |
| CLIP | GREEN | Audio Input Signal > 6dBV |
| PRT | GREEN | Amplifier Protection Circuit Operation |

※ If CLIP LED flashes, please adjust input level on the webpage. If PRT LED flashes, please check device and connection of speaker lines.

**2. AMP STATUS INDICATOR LED**

LED that displays the status of amplifier operation.

※DISABLE: Amp use is selectable on the webpage of EVAMATRIX.

| Indicator LED | | Description and operating conditions |
|---|---|---|
| Type | LED | |
| DISABLE | YELLOW | Unused Amplifier |
| AMP FAULT | YELLOW | Amplifier Problem |
| LINE FAULT | YELLOW | Speaker, Line Problem |

### 3. OLED DISPLAY & CONTROL KNOB

It shows IP and MAC address. User turns screen by nob.

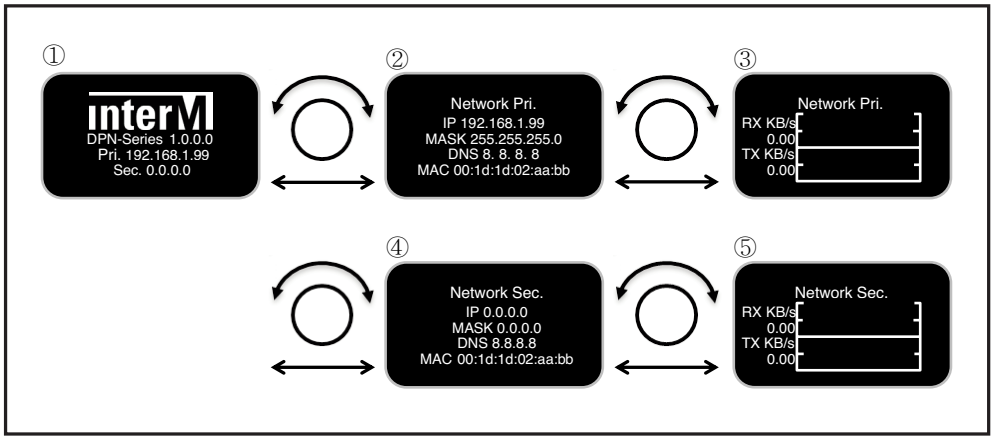


❶ Standby Screen Display
❷ Network Primary Information Display
❸ Network Primary Speed Display
❹ Network Secondary Information Display
❺ Network Secondary Speed Display
※ Screen goes off if operation is not occurred for a while.

### 4. DEVICE STATUS INDICATOR LED

LED that displays the operation and broken status of device.
※ If the NETWORK LED is on, check the UTP cable is connected or EVAMATRIX is on.

| Indicator LED | | Description and operating conditions |
|---|---|---|
| Type | LED | |
| POWER ON | GREEN | Power Normal Operation |
| SYSTEM OK | GREEN | System Normal Operation |
| POWER | YELLOW | Power Problem |
| SYSTEM | YELLOW | System Problem |
| NETWORK | YELLOW | Network Problem |

### 5. AIR VENTS

Air circulation vents to prevent the device from overheating. Please be careful not to block the front/back of the vents.

# Rear Panel

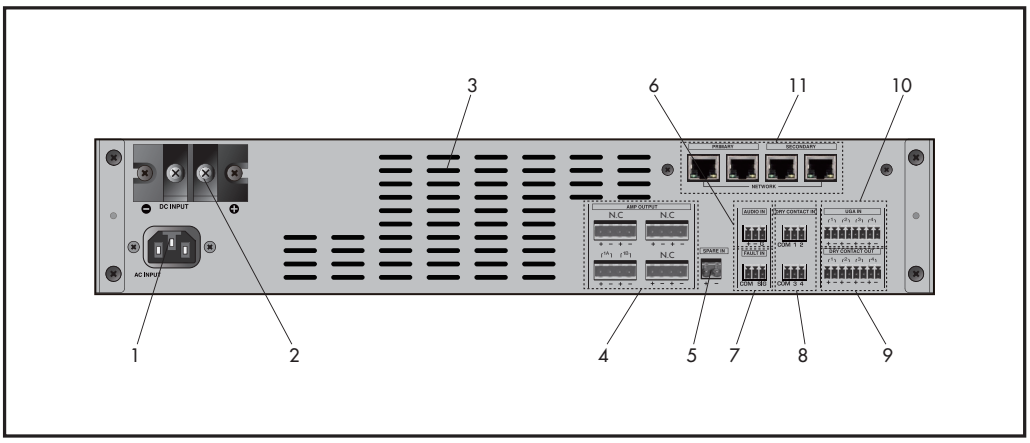


**1. AC INPUT TERMINAL**

This is an AC power supply terminal.

※ Please check AC voltage before connection.

**2. DC INPUT TERMINAL**

Emergency DC back up power (DC 24V) terminal. When AC power is cut off, The unit will operate with DC power from spare battery pack.

※ Please confirm power and polarity before connection.

**3. AIR VENTS**

Air circulation vents to prevent the device from overheating. Please be careful not to block the front/back of the vents.

**4. SPEAKER OUTPUT TERMINAL**

Each channel provides 2 terminals of speaker outputs(A, B). Equipped speaker line checker detects fault of speaker lines.

- Speaker connection

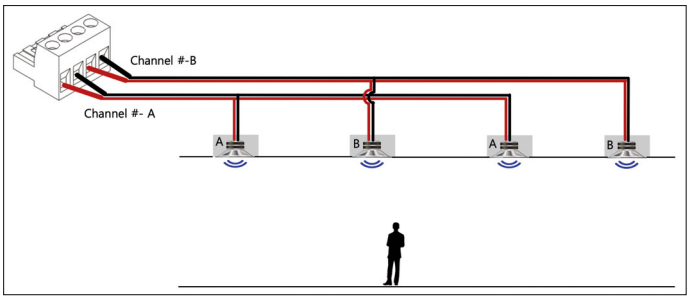


It can be in use for the place where dual speaker line connection is necessary.

● Speaker output channel and impedance

| Output | Item | Output channel | impedance |
|---|---|---|---|
| 240W | DPN-240S | 1 | 100V/41.66Ω |
| | DPN-240D | 2 | |
| | DPN-240Q | 4 | |
| 480W | DPN-480S | 1 | 100V/20.83Ω |
| | DPN-480D | 2 | |

※ Total impedance of speakers should not be lower than rating impedance.
(Total impedance of speakers is all connected speaker impedance of channel A and B).
※ N.C terminal is not output terminal for audio. (Depending upon model)

**5. SPARE IN TERMINAL**

It is a replacement terminal in case that current amp is defected. Speaker output can be set at the webpage of EVAMATRIX.

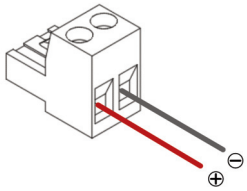

**6. AUDIO IN TERMINAL**

It is a Balanced input terminal for line connection. It can be set at the webpage of EVAMATRIX.

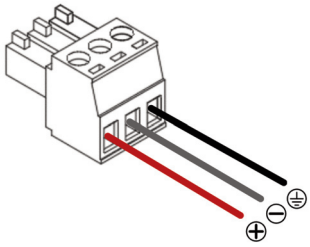

**7. FAULT IN CONTACT TERMINAL**

It is a contact terminal that indicates fault of externally connected devices. Fault occurs by detecting resistance of COM and SIG contacts. Fault events are sent to EVAMATRIX.

● Terminal Connection

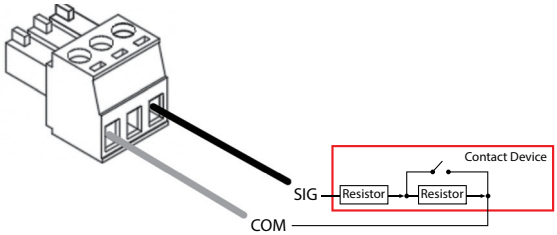

● Operation status by resistance

| Resistance | Operation |
|---|---|
| 20kΩ | Stand by |
| Open or Short | Connection fault |

**8. DRY CONTACT IN TERMINAL**

4 channels are available and it detects resistance between COM terminal and contact. Fault events are sent to EVAMATRIX.

● Terminal connection

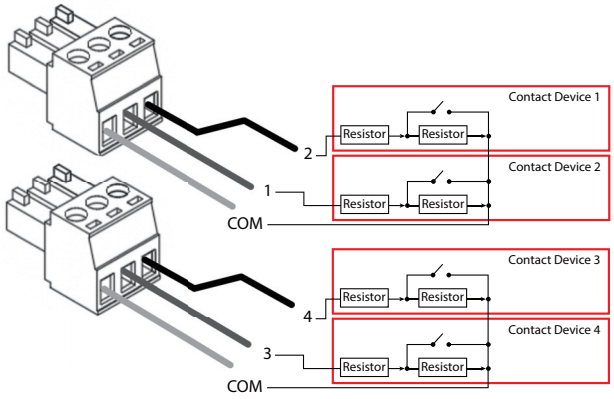


● Operation status by resistance

| Mode | Resistance | Operation |
|---|---|---|
| 10kΩ | 10kΩ | Contact event |
| | 20kΩ | Stand by |
| | Open or Short | Connection fault |
| 4.7kΩ | 4.7kΩ | Contact event |
| | 9.4kΩ | Stand by |
| | Open or Short | Connection fault |

※ Please refer to the manual of webpage setting for details.

## 9. UGA IN TERMINAL (WET CONTACT)

Below events occur in EVAMATRIX by input DC.

- Terminal connection

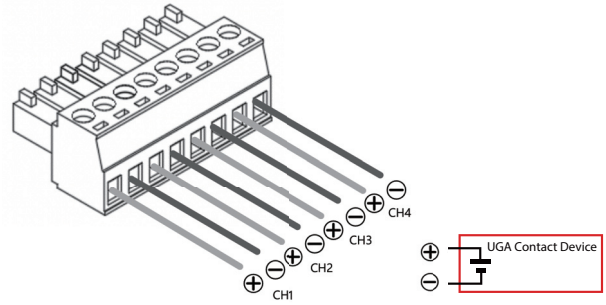


- Operation status by DC

| Input DC | Operation |
|---|---|
| -2V < UGA IN < 2V | Connection fault |
| 2V < UGA IN < 22V | Stand by |
| 22V < UGA IN < 60V | Event occurs |

※ Please check polarity before connection and maximum should be less than 60V.
※ Please refer to the manual of webpage setting for details.

## 10. DRY CONTACT OUT TERMINAL

Normal polarity is short. If contact of each channel is operated on the webpage polarity is open.

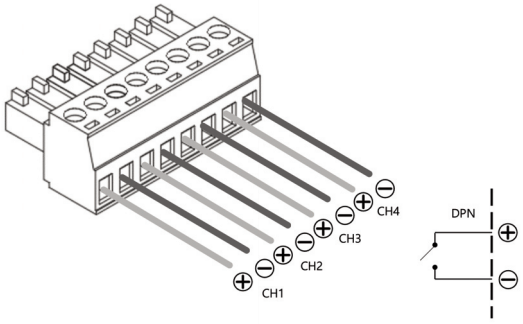


※ Please refer to the manual of webpage setting for contact in/output line checker and Earth fault.

## 11. NETWORK CONNECTING TERMINAL

It is set with EVAMATRIX and transmitted by Dante. Primary 2 port /Secondary 2 port are available and also DPN and Daisy-Chain* network are available.

*Daisy-Chain: Wiring scheme in which multiple devices are wired together in sequence.

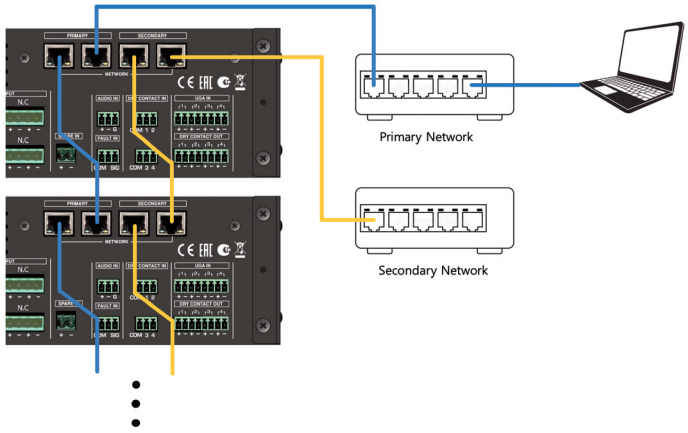


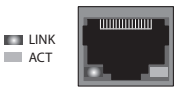


| | <100 Base-T> | | <1G Base-T> |
|---|---|---|---|
| PIN NO | Function | PIN NO | Function |
| 1 | TXN | 1 | MX(0)+ |
| 2 | TXP | 2 | MX(0)- |
| 3 | RXN | 3 | MX(1)+ |
| 4 | NA | 4 | MX(1)- |
| 5 | NA | 5 | MX(2)+ |
| 6 | RXP | 6 | MX(2)- |
| 7 | NA | 7 | MX(3)+ |
| 8 | NA | 8 | MX(3)- |

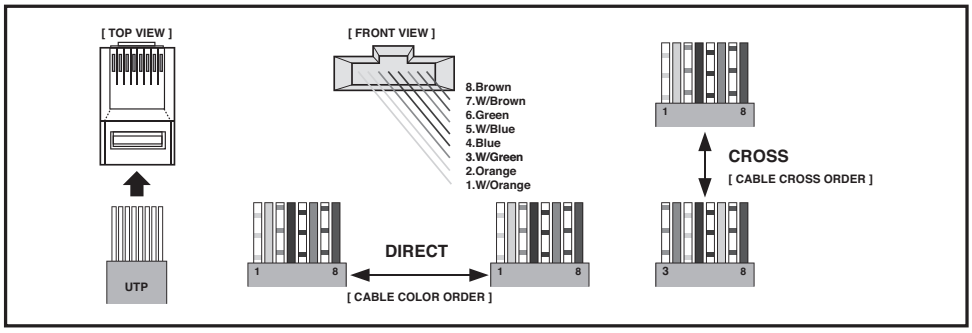


※ Each port supports 100/1000 Base-T. It is recommended that the same link speed between Primary and Secondary.

※ Additional switch is necessary for Primary and Secondary network and same link speed is preferable.

# Applications

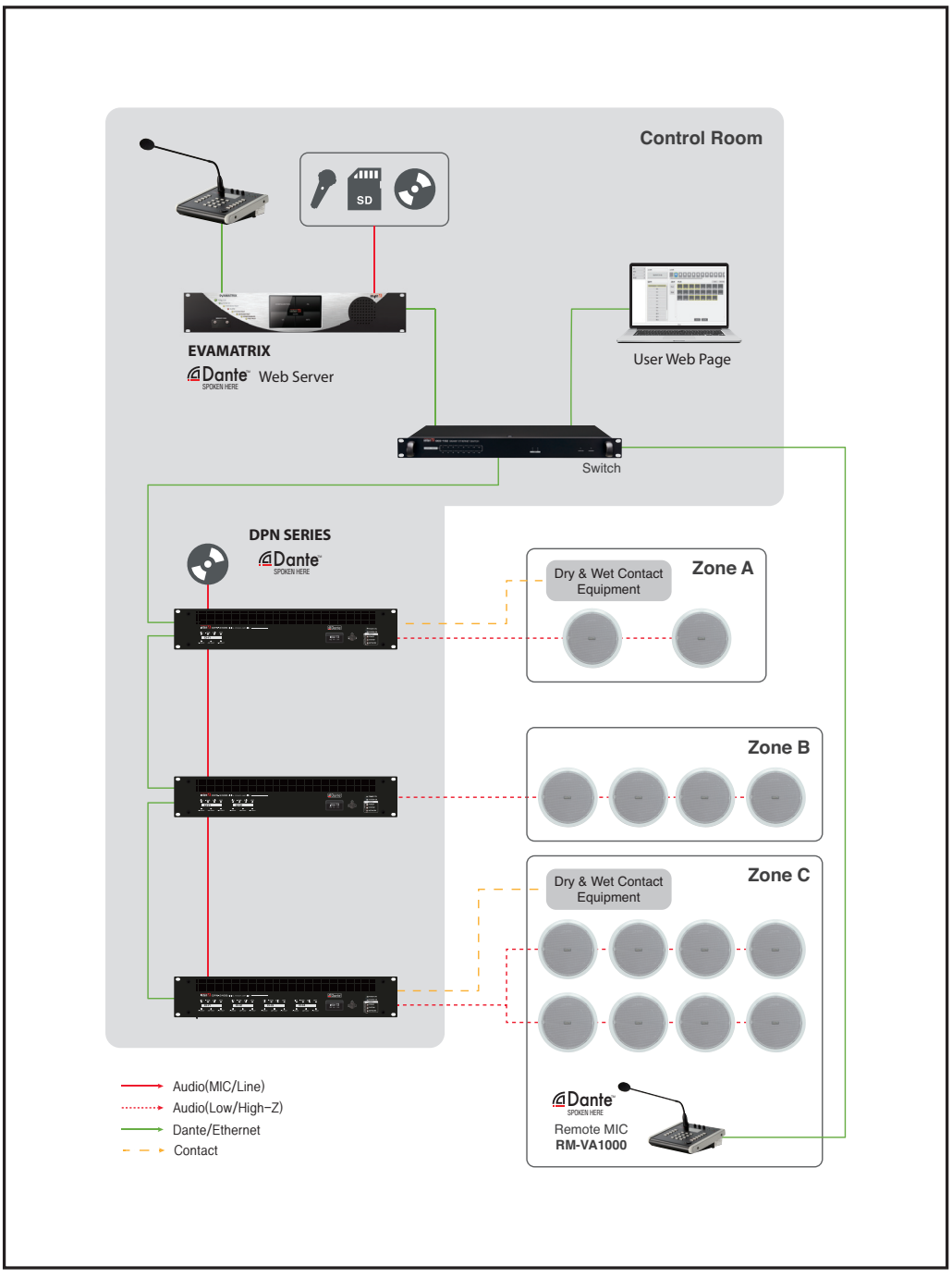

# Block Diagram

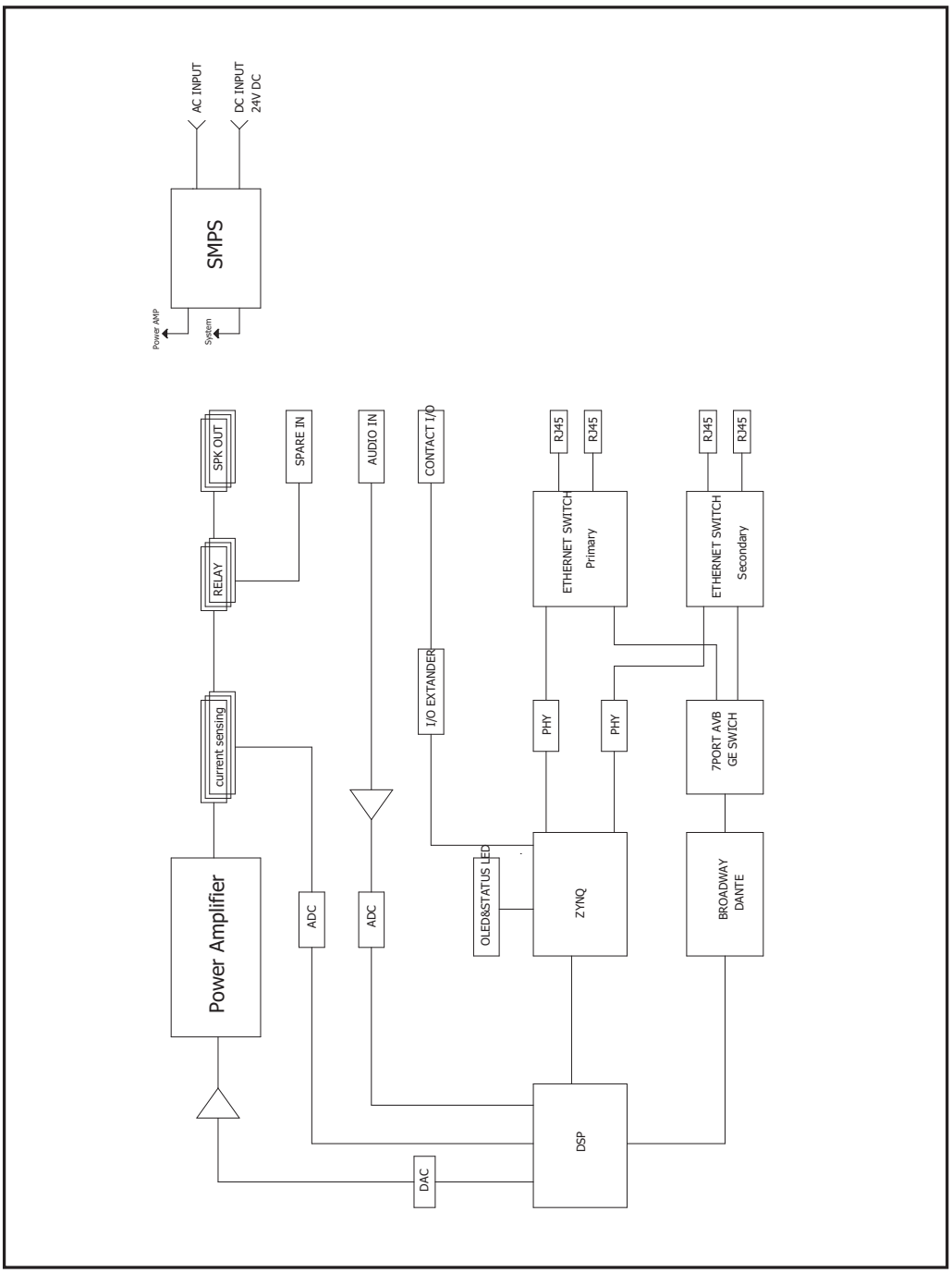

# Specifications

| | DPN-240S | DPN-240D | DPN-240Q | DPN-480S | DPN-480D |
|---|---|---|---|---|---|
| Rated Power | 240W x 1CH | 240W x 2CH | 240W x 4CH | 480W x 1CH | 480W x 2CH |
| Output Voltage/Impedance | 100V/41.66Ω | | | 100V/20.83Ω | |
| Input Sensitivity | 5dBV | | | | |
| THD (Rated Power, 1kHz) | Less than 1% | | | | |
| S/N (20kHz LPF, A-wtd) | More than 85dB | | | | |
| Frequency Response (±3dB, 1W) | 20~20kHz | | | | |
| Network | Dante™ redundant™, Ethernet 100/1000 Base-T (RJ-45) | | | | |
| Operating Temperature | -10℃~40℃ | | | | |
| Power Source | AC 220-240V, 50/60Hz, DC 24V | | | | |
| Power Consumption | 135W | 140W | 280W | 135W | 240W |
| Weight (SET) | 8.59kg/18.94lb | 9.1kg/20.06lb | 10.1kg/22.27lb | 8.56kg/18.87lb | 9.7kg/21.38lb |
| Dimensions (SET) | 482(W) x 88(H) x 450(D)mm/19(W) x 3.5(H) x 17.7(D)in | | | | |

* Design and specification are subject to be changed for the improvement of product quality without pre notice.

※ **DIMENSIONS**

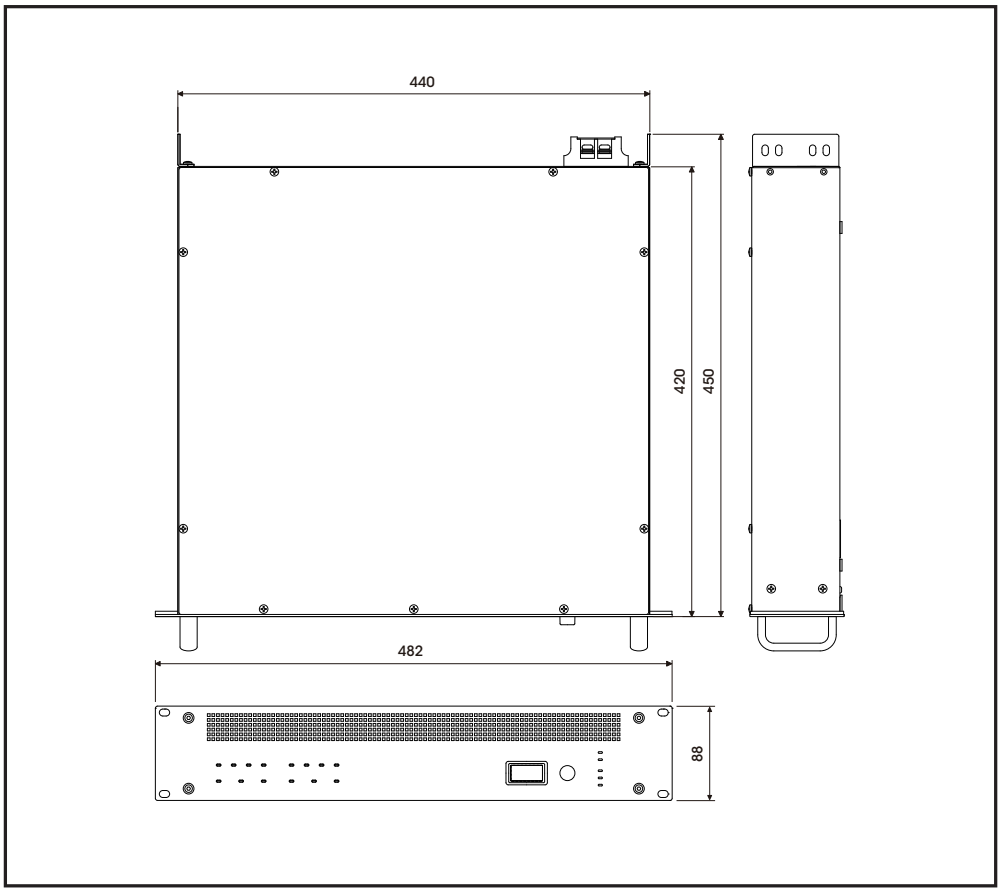

# Service

### Procedures
Take steps to insure the problem is not related to operator error or other products within the system. Information provided in the troubleshooting portion of this manual may help with this process. Once it is certain that the problem is related to the product contact your warranty provider as described in the warranty section of this manual.

### Schematic
A Schematic is available by contacting your warranty provider.

### Parts List
A Parts List is available by contacting your warranty provider.

# Variations and Options

### Variations
Products supplied through legitimate sources are compatible with local AC power requirements.

### Options
No optional items are available for this product.

# Warranty

Warranty terms and conditions vary by country and may not be the same for all products. Terms and conditions of warranty for a given product may be determined first by locating the appropriate country which the product was purchased in, then by locating the product type.

To obtain specific warranty information and available service locations contact Inter-M directly or the authorized Inter-M Distributor for your specific country or region.

Inter-M, Ltd. (Korea) began operations in 1983.

Since then, Inter-M has grown to become one of the largest manufacturers
of professional audio and commercial sound electronics equipment in the world.

Inter-M has gained worldwide recognition for its own branded products,
as well as private label manufacturing of electronics sold under other names (OEM).

The company is no longer just a Korean company, but rather a global company
that is truly international in scope, with factories and offices in Korea and China,
and sales and marketing operations located in Japan, Europe, and the U.S.A.

With more than 850 employees around the globe,
Inter-M is well-poised for further growth and expansion.

**Inter-M Americas, INC.**
5666 CORPORATE AVE. CYPRESS, CA 90630
TEL : +1-714-828-2200, FAX : +1-714-828-2210
Home Page : http://www.inter-m.net, E-mail : info@inter-m.net

**Inter-M Corporation**
SEOUL OFFICE : 719, DOBONG-RO, DOBONG-GU, SEOUL, KOREA
TEL : +82-2-2289-8140~8, FAX : +82-2-2289-8149
Home Page : http://www.inter-m.com, E-mail : overseas@inter-m.com

**MADE IN KOREA**
February 2022 151295