SM12

Coaxial 2Way Passive
Multi-purpose
Stage Monitor Speaker



inter M
PROFESSIONAL

SM12

Coaxial 2Way Passive Stage Monitor



Always around you

inter M
PROFESSIONAL



SM12 is a Coaxial 2-Way Passive Multi-purpose Stage Monitor Speaker. It shows consistent frequency response and directivity over the entire frequency range using the latest coaxial driver technology.
This technology ideally improves the situation in which traditional speakers with the structure of upper tweeter-lower woofer have inconsistent vertical frequency and directional response. It prevents the audience from hearing the even sound wherever they sit. In addition, a wider dispersion angle allows the listener to have a more flexible monitoring environment, allowing him/her to use this equipment more diversely.
Its easy-to-carry handle provides easy transportation, and it can be used as a main speaker as well as a monitor speaker with M10 rigging points and a pole cup that can be installed on the speaker stand. The best sound for professional users is reproduced by the rich bass from the birch enclosure and the vivid treble from the large tweeter.



Concert halls/Performance venues, Religious facilities,
Multi-purpose auditorium/Gymnasium, Sports facilities, Outdoor events







Feature

- 12" Passive (2Way coaxial) Stage Monitor
- 12” Woofer with 1” Compression Driver
- Coverage angles (H × V)
  100°×95°(1kHz)/60°×40°(4kHz)
- Max dBSPL : 128dB
- A handle for easy carrying
- M10 rigging points for many kinds of installations
- A pole cup for standing a pole
- Birch enclosure and flame retardant acoustic adsorbent
- Rubber Feet for fixing and protection
- Black Polyurea coating resistant to external stimuli such as moisture



PRECISION COAXIAL DRIVER

The bass driver and treble driver are placed on the same horizontal/vertical axis so that you can easily match the sound image with a simple delay adjustment, and you can hear the sound of the same phase from any position horizontally/vertically.

LARGE DIAPHRAGM HF SECTION

The treble driver supports high power through a large voice coil, and produces clear, distortion-free sound even at low crossover points. The titanium diaphragm extends the frequency band to 20 kHz; the optimized horn design supports direct high-pitched radiation; and the heat generated by the voice coil is designed to be effectively released to prevent heat-induced sound compression.



MULTI-PURPOSE SPEAKER

SM12 can be used as a main speaker as well as a monitor speaker. Four rubber feet are applied at the bottom of the monitor to prevent slipping, and the port-integrated handle makes it easy to carry the monitor.

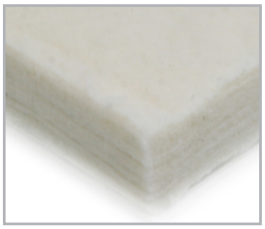

ECO ACOUSTIC ABSORBENT

In addition, when used as the main speaker, the M10 rigging points evenly placed on the top/bottom, side, and back of the speaker support the installation of the speaker in any direction, and the stand can be temporarily installed with the bottom cup.



NORDIC BIRCH PLYWOOD

SM12 is made of Korean eco-friendly acoustic absorbent. This acoustic absorbent is made of natural fiber, which is the raw material to produce paper, and has passed environmental hazard tests and flame retardancy tests. Its acoustic absorption coefficient is higher than that of existing absorbent.

Specification

	SM12
Type	12" Coaxial 2Way Passive Stage Monitor Speaker
Frequency Range (-10dB)	65Hz ~ 20kHz
Power Handling (AES)	400W
Power Handling (Program)	800W
Power Handling (Peak)	1600W
Recommended Amplifier Power	800W
Sensitivity (1W/1m)	96dB
Maximum SPL (Peak)	128dB
Nominal Dispersion	1kHz : 100°×95°, 4kHz : 60°×40°
Nominal Impedance	LF : 8Ω/HF : 8Ω
LF Driver	12" Coaxial 3" Voice Coil
HF Driver	12" Coaxial 1.7" Voice Coil
Horn	60°×40° Coverage Horn
Enclosure Material	Birch Plywood 18T, Polyurea Coating
Grille	SECC 1.5t, Powder Coating/BLACK
Connection	3×SPEAKON (1+,1-) [Parallel]
Fittings/Suspension	14 Point M10 inserts(4×Rear, 4×Bottom, 3×Left, 3×Right)
Finish	Polyurea Coating
Color	BLACK
Weights (Net)	23.8kg/52.5lb
Dimensions (Net, W×H×D)	502×352×508mm/19.7×13.8×19.9

	LF Unit	HF Unit
Nominal Diameter	321mm(12")	
Nominal Impedance	8Ω	8Ω
Rated Power AES	400W	60W
Continuous Program Power	800W	120W
Sensitivity (@ 1W/1m)	98.0dB	106.2dB
Voice Coil Diameter	75mm(3in)	44mm(1.7in)
Voice Coil Winding Depth	15mm	2.6mm
Magnetic Gap Depth	10mm	3mm
HF Recomm. Crossover Frequency	-	1.6kHz
Magnet Weight	2700g	
Weights (Net)	8.3kg	

Technical Data

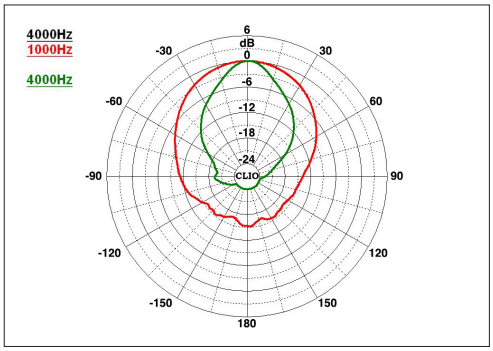

POLAR PATTERN(H)

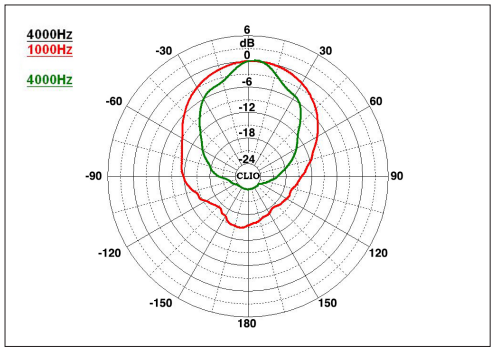

POLAR PATTERN(V)

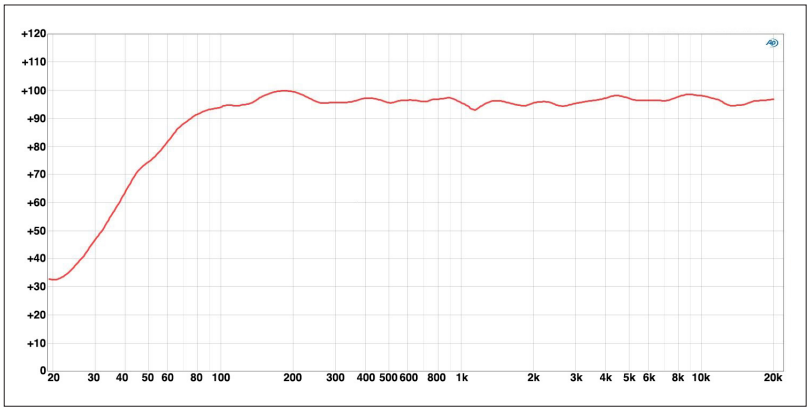

FREQUENCY RANGE & IMPEDANCE

Drawing

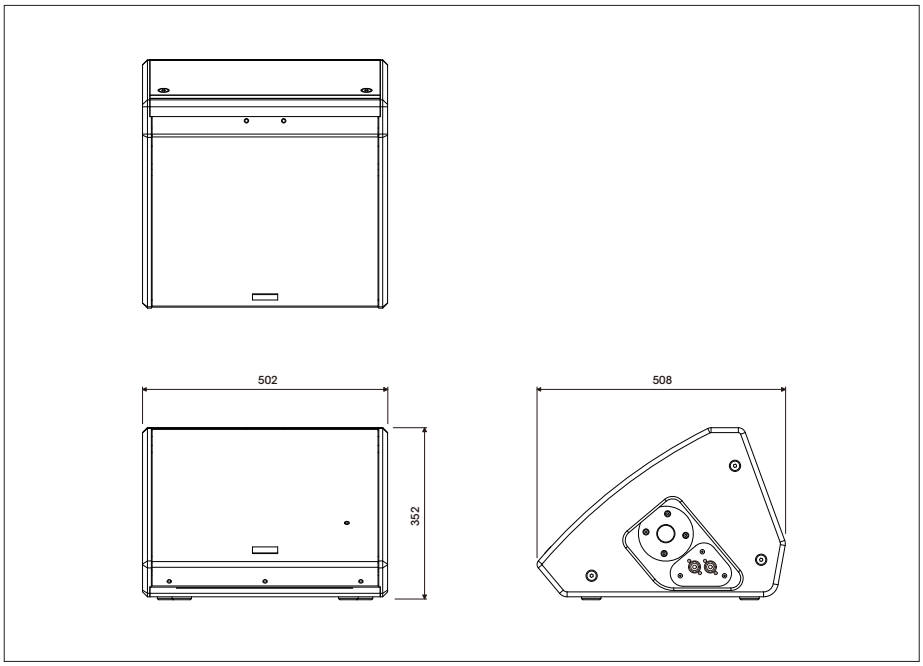

Inter-M Corporation

73, HWAHAP-RO 1402BEON-GIL, YANGJU-SI, GYEONGGI-DO, REPUBLIC OF KOREA
Tel_ +82-2-2289-8141~8 **Fax_** +82-2-2289-8149 **E-mail_** overseas@inter-m.com **www.inter-m.net**

※ The contents stated in this company profile may be subject to change depending on our internal circumstances.

2024. 3. V2