Operation Manual

Digital Power Amplifier

DPA-300S/600S/900S/1200S
DPA-300SO/600SO/900SO/1200SO

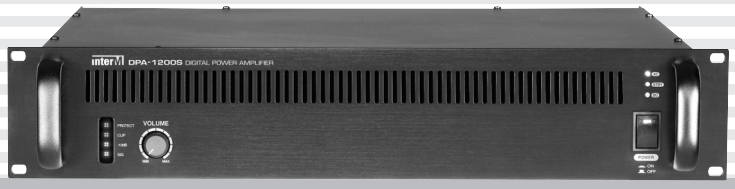

* Rack mount products in the Western Hemisphere(North America, South America, and the Caribbean) do not have handles installed due to customer preference.

interM

Welcome

A personal welcome to you from the management and employees of Inter-M

All of the co-workers here at Inter-M are dedicated to providing excellent products with inherently good value, and we are delighted you have purchased one of our products.

We sincerely trust this product will provide years of satisfactory service, but if anything is not to your complete satisfaction, we will endeavor to make things right.

Welcome to Inter-M, and thank you for becoming part of our worldwide extended family!





This symbol is intended to alert the user to the presence of uninsulated “dangerous voltage” within the product’s enclosure that may be of sufficient magnitude to constitute a risk of electric shock to persons.



This symbol is intended to alert the user to the presence of important operation and maintenance (servicing) instructions in the literature accompanying the appliance.

Caution: To prevent electric shock do not use this (polarized) plug with an extension cord, receptacle or other outlet unless the blades can be fully inserted to prevent blade exposure.

Attentions: Pour prévenir les chocs électriques ne pas utiliser cette fiche polarisée avec un prolongateur, une prise de courant on une autre sortie de courant, sauf si les lames peuvent étre insérées à fond sans en laisser aucune partie à découvert.

WARNING

To prevent fire or shock hazard, do not expose the unit to rain or moisture.

*WARNING FOR YOUR PROTECTION PLEASE READ THE FOLLOWING-WATER AND MOISTURE: Unit should not be used near water(e.g. near a bathtub, washbowl, kitchen sink, laundry tub, in a wet basement, or near a swimming pool, etc). Care should be taken so than objects do not fall and liquids are not spilled into the enclosure through openings.
*CLASS 2 WIRING (Adjacent to speaker terminal): The speaker output of this apparatus can exceed 10 Watts and could be a shock injury. Connection to speakers should be performed by a skilled person.
*Do not install this equipment in a confined space such as a book case or similar unit.
*This apparatus shall not be exposed to dripping or splashing and no objects filled with liquids, such vases, shall be placed on the apparatus.
*This apparatus shall be connected to a mains socket outlet with a protective earthing connection.
*It has heed to be easy to disconnect the device. To disconnect the device from power, separate AC input cable from inlet or unplug the AC Cord.

CAUTION

*These servicing instructions are for use by qualified service personnel only. To reduce the risk of electric shock, do not perform any servicing other than that contained in the operating instructions unless you are qualified to do so.

NOTE

*This equipment has been tested and found to comply with the limits for a Class A digital device, pursuant to Part 15 of the FCC Rules. These limits are designed to provide reasonable protection against harmful interference when the equipment is operated in a commercial environment. This equipment generates, uses, and can radiate radio frequency energy and, if not installed and used in accordance with the instruction manual, may cause harmful interference to radio communications. Operation of this equipment in a residential area is likely to cause harmful interference in which case the user will be required to correct the interference at his own expense.

Contents

Unpacking 2

Installation
- Environment 2
- Important Safety Instructions 2

Features 3

Front Panel 4

Rear Panel 5

Speaker Connection 7

Applications 8

Block Diagram 9

Specifications 13

Service
- Procedures 17
- Schematic 17
- Parts List 17

Variations and Options 17

Warranty 17

Unpacking

Although your DPA-300S/600S/900S/1200S, DPA-300SO/600SO/900SO/1200SO is neither complicated nor difficult to operate, we recommend you take a few minutes to read this brief manual and familiarize yourself with the important information regarding product features, setup and operation.

As with most electronic devices, we strongly recommend you retain the original packaging. In the unlikely event the product must be returned for servicing, the original packaging (or reasonable equivalent) is required.

Installation

Environment
Never place this product in an environment which could alter its performance or reduce its service life. Such environments usually include high levels of heat, dust, moisture, and vibration.

IMPORTANT SAFETY INSTRUCTIONS

1. Read these instructions.
2. Keep these instructions.
3. Heed all warnings.
4. Follow all instructions.
5. Do not use this apparatus near water.
6. Clean only with dry cloth.
7. Do not block any ventilation openings. Install in accordance with the manufacturer's instructions.
8. Do not install near any heat sources such as radiators, heat registers, stoves, or other apparatus (including amplifiers) that produce heat.
9. Do not defeat the safety purpose of the polarized or grounding-type plug. A polarized plug has two blades with one wider than the other. A grounding type plug has two blades and a third grounding prong. The wide blade or the third prong are provided for your safety. If the provided plug does not fit into your outlet, consult an electrician for replacement of the obsolete outlet.
10. Protect the power cord from being walked on or pinched particularly at plugs, convenience receptacles, and the point where they exit from the apparatus.
11. Only use attachments/accessories specified by the manufacturer.
12. Use only with the cart, stand, tripod, bracket, or table specified by the manufacturer, or sold with the apparatus. When a cart is used, use caution when moving the cart/apparatus combination to avoid injury from tip-over.
13. Unplug this apparatus during lightning storms or when unused for long periods of time.
14. Refer all servicing to qualified service personnel. Servicing is required when the apparatus has been damaged in any way, such as power-supply cord or plug is damaged, liquid has been spilled or objects have fallen into the apparatus, the apparatus has been exposed to rain or moisture, does not operate normally, or has been dropped.



Features

- **High Performance Class-D Power PA Amplifier**
  High performance Class-D Power amplifiers produce 300/600/900/1200W rated power each channel.

- **Emergency Power Back Up (24VDC) Capability**
  The unit operates on a DC24 V battery power supply for emergency back up without UPS (DPA-SO models are not included with emergency power back Up (24VDC))

- **Rated Output Power Via DC Backup Supply**
  Output power can be maintained as AC power when 24VDC power supplied.

- **Advanced Power Circuitry Design**
  The combination Class-D type amplification circuitry combined with SMPS creates a high efficiency amplifier offering reduced power consumption and low heat dissipation and weight.

- **Advanced Protection Circuitry**
  Advanced protection circuitry guards against overheating, shorted outputs, DC output, overloads and mismatched power

- **A Variety of operation Indicators**
  Signal, -10dB signal level, Clip, Protection and system power (AC, DC, STBY) indicators

- **Balanced Input**
  This connection is used to ensure the lowest noise operation which eliminates the common noise from the cable.

- **Remote Power ON/OFF**
  The remote power allows the amplifier to be turned on or off from a distance or other device via dry contact closure.

- **PRIORITY Input**
  PGM is interrupted and over ridden by the Priority input, when a contact closure is received on the PRI select terminal. This is Ideal for Emergency message broadcasting applications.

Accessories
Ac Power Cord x1
3P Terminal Block x1
2P Terminal Block x1
2P Terminal Block (Ac Remote power) x1
8P Terminal Block x1
Operation Manual x1
Screws for Rack mount Bracket x4

Front Panel

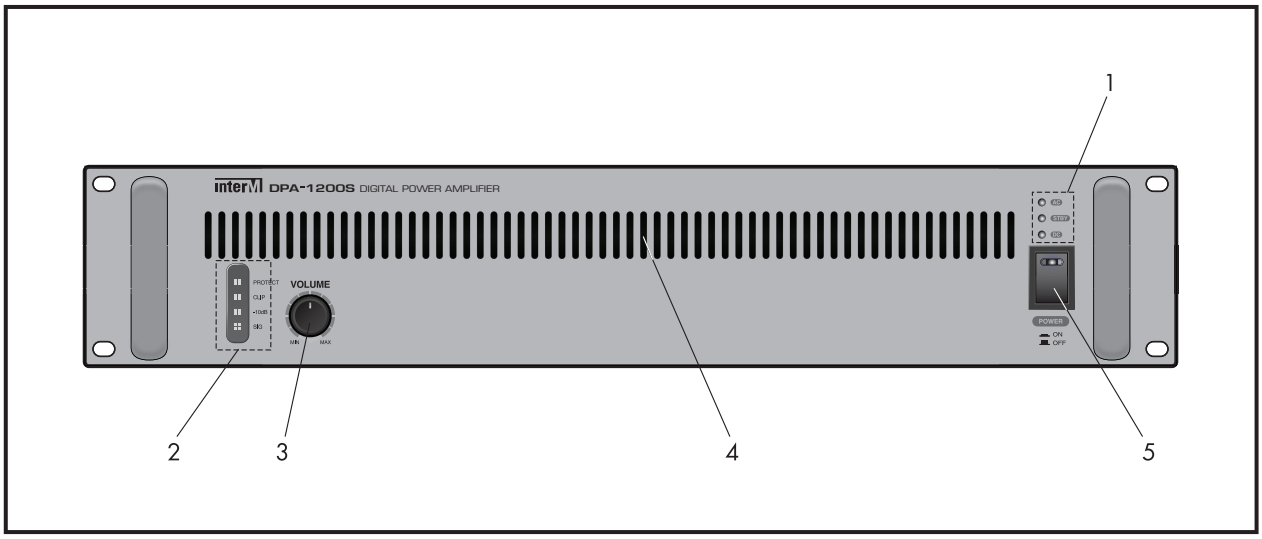

1. SYSTEM POWER INDICATORS

When Power switch is on, AC or DC LED will illuminate depending on input Power source. When Power switch is off, STBY LED will illuminte.

※NOTE: During operation of DC, amplifier is keep going to work even if the switch of power is turned off.

	Power SW	Power LED	AC LED	STBY LED	DC LED
AC/DC	SW ON	ON	ON	OFF	OFF
	SW OFF	OFF	OFF	ON	OFF
AC only	SW ON	ON	ON	OFF	OFF
	SW OFF	OFF	OFF	ON	OFF
DC only	SW ON	ON	OFF	OFF	ON
	SW OFF	ON	OFF	OFF	ON

2. SIGNAL INDICATORS

The LEDS indicate the amplifier's output signal levels.

SIG : Green, -10dB : Green, Clip : Yellow, PROTECT : Red

3. VOLUME CONTROL

Turn the volume controls clockwise to increase gain and counterclockwise to decrease gain.

4. COOLING VENTS

Air flow is front to back. DO NOT block front or rear air vents.

5. POWER SWITCH

Push on/off switch. When Power switch is on, BLUE LED will illuminate.

Rear Panel

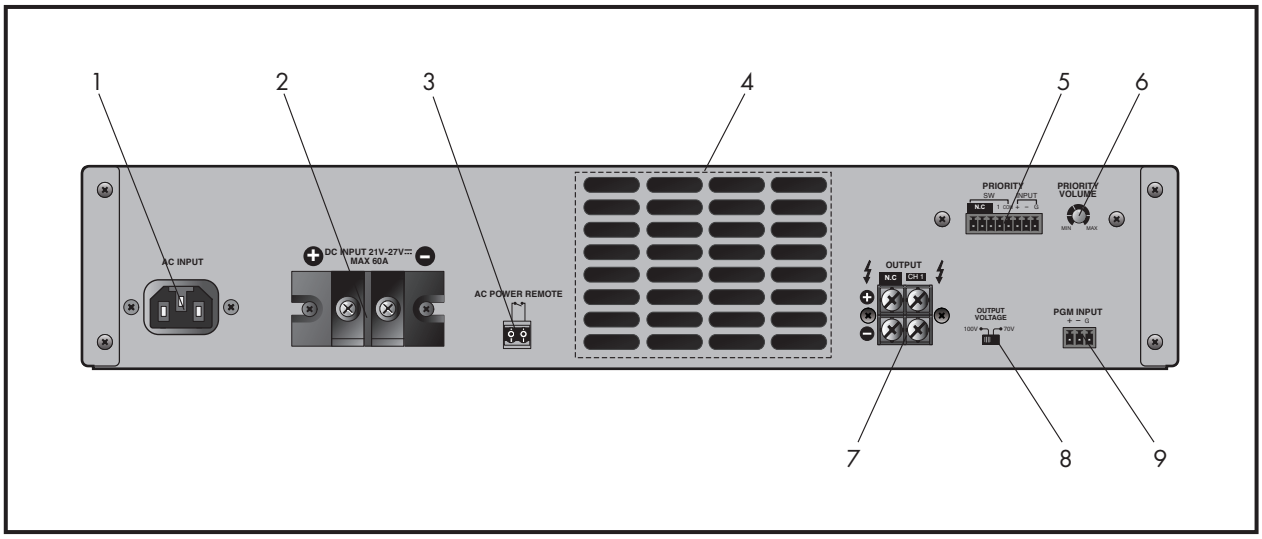

1. AC MAINS (AC INLET)

It accepts a standard IEC mains cable, provided

2. DC INPUT TERMINAL

Emergency DC back up power (24VDC) terminal. When AC power is cut off, The unit will operate with DC power from spare battery pack.
(DPA-SO models are not included with Emergency Power Back Up (24VDC))

3. AC POWER REMOTE

This terminal allows the amplifier to be turned on or off from a distance or other device.

4. COOLING VENTS

Air flow is front to back. DO NOT block front or rear air vents.

5. PRIORITY INPUT AND CONTACT CLOSURE

Each amplifier module has 2 audio inputs. The Primary program input, PGM and Priority input, PRI. The primary regular broadcast program input, PGM is interrupted and over ridden by the Priority input, PRI, when a contact closure is received on the PRI select terminal. This is Ideal for Emergency message broadcasting applications.

6. PRI VOLUME CONTROL

It controls the mute level of all other input signal when the PRI IN signal is present.

7. OUTPUT TERMINAL

Speaker Output Terminal with Euro Block.

8. OUTPUT VOLTAGE SELECTOR

This two-position switch is used to select a output voltage (100V or 70V).

9. PGM INPUT CONNECTOR

Balanced 3-pin terminal block connector accept the source input.

Speaker Connection

Before connecting speakers to the unit, be sure to disconnect the AC power cable. Make certain that the total impedance is not less than the rated impedance indicated.

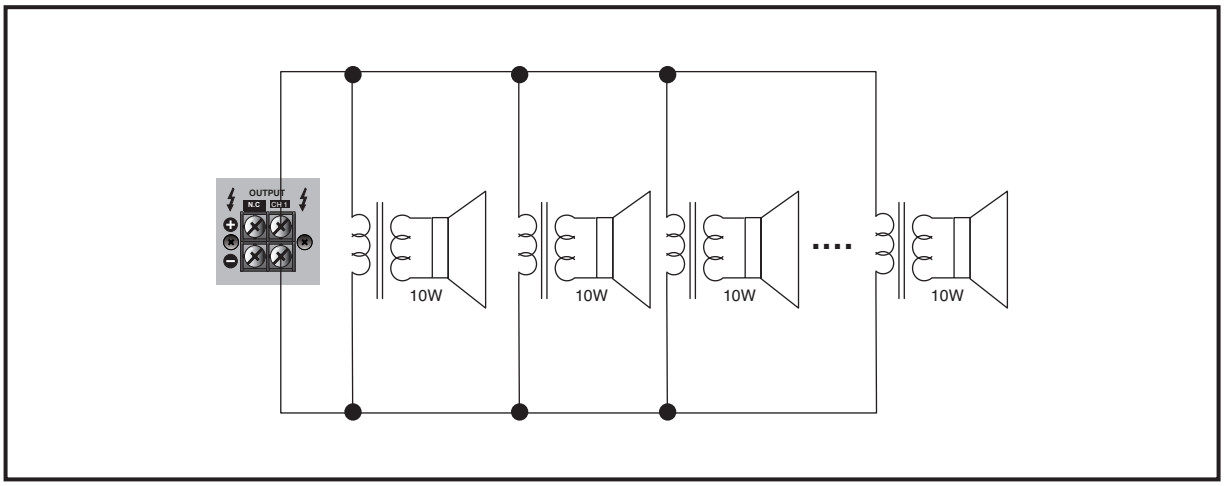

※ **Caution:** 1. Make sure that the total impedance does not equal or less than the rated impedance.

Speaker Output	Speaker Impedance
300W	100V / 33.3Ω 70V / 16.3Ω 49V / 8Ω
600W	100V / 16.6Ω 70V / 8.1Ω 69.3V / 8Ω
900W	100V / 11.1Ω 70V / 5.4Ω 84.9V / 8Ω
1200W	100V / 8.3Ω 70V / 4Ω 98V / 8Ω

2. Do not connects a speaker has lower impedance than rated impedance, It may cause the problem to unit.
3. Do not put the speaker cable close to input signal cable.

Applications

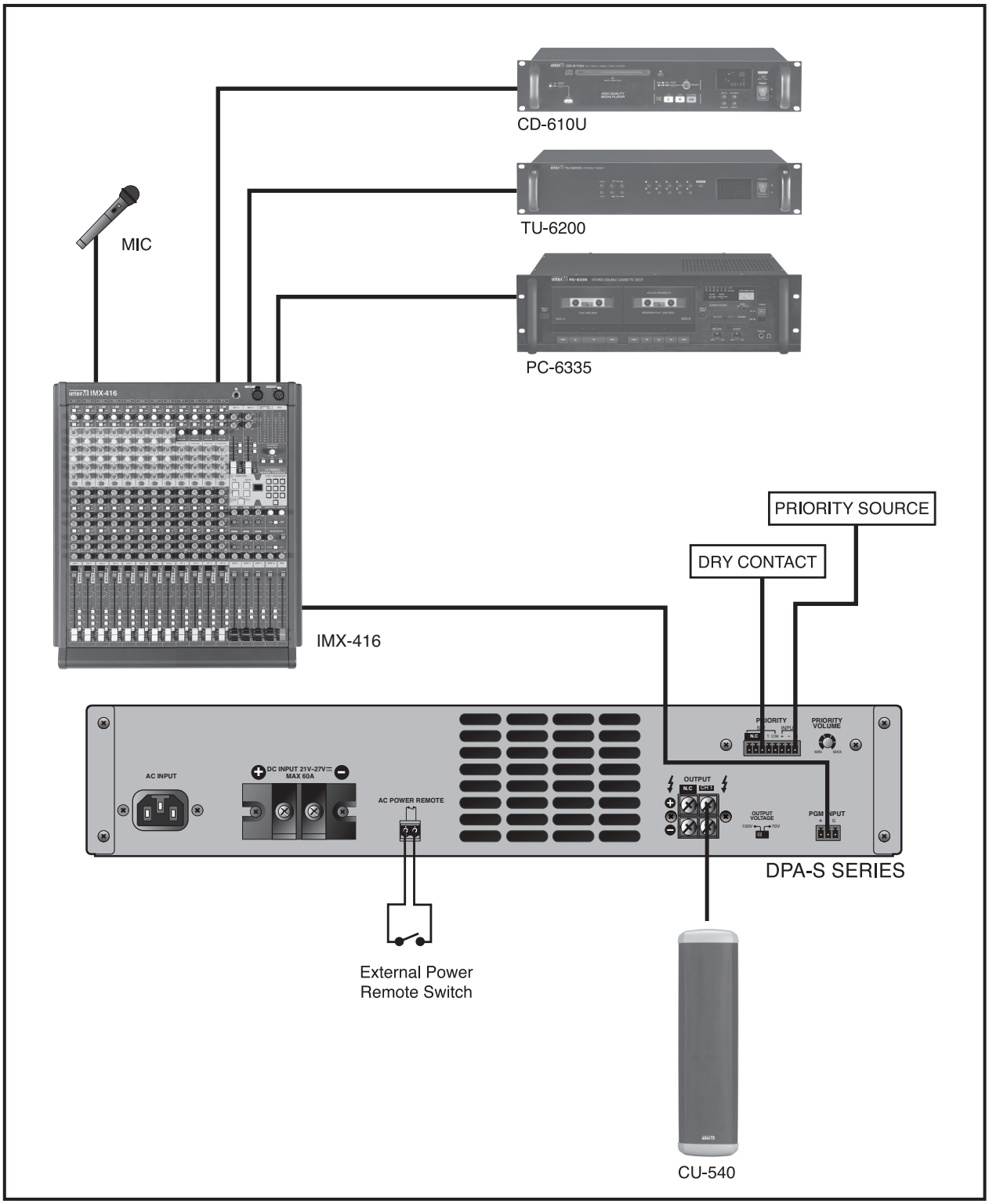

Block Diagram

DPA-300S/600S

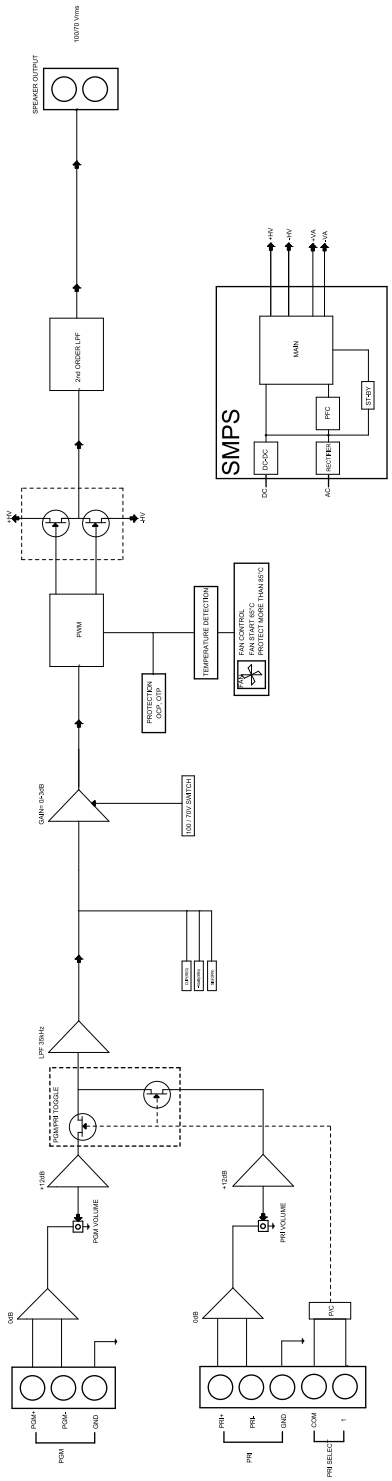

DPA-900S/1200S

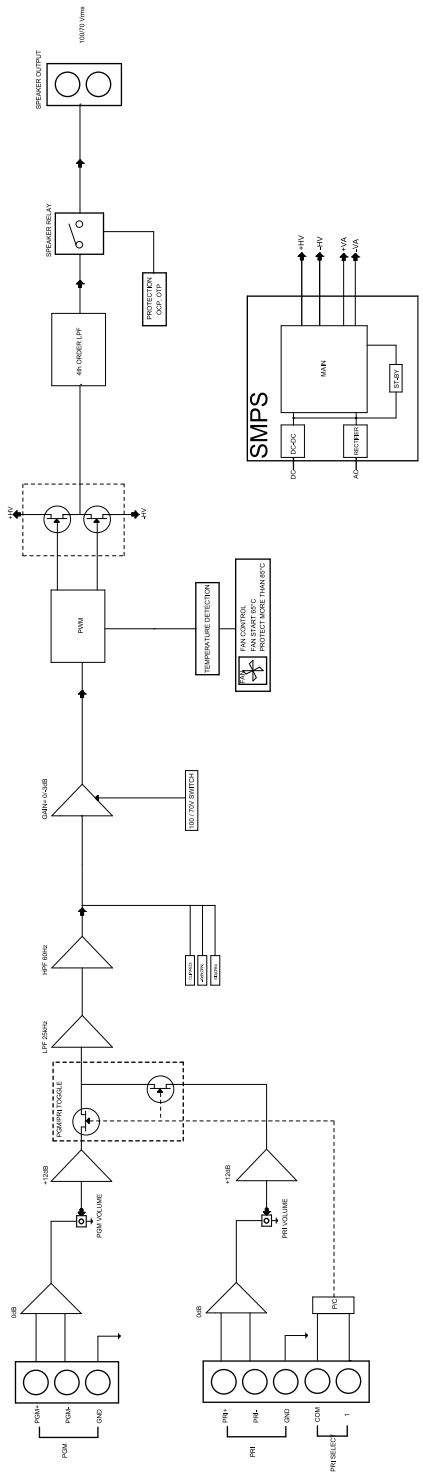

DPA-300SO/600SO

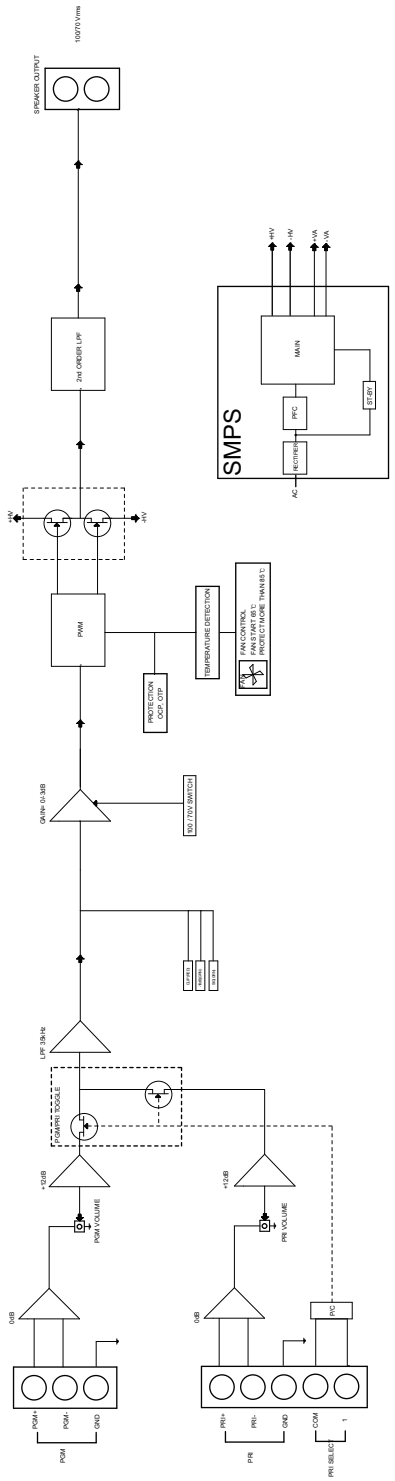

DPA-900SO/1200SO

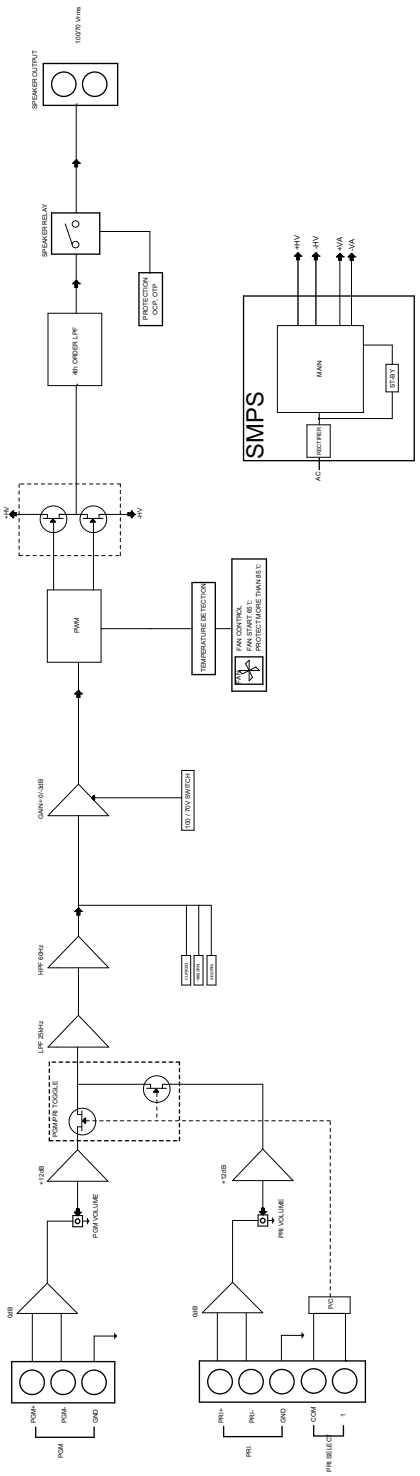

Specifications

		DPA-300S	DPA-600S	DPA-900S	DPA-1200S
Rated Output Power		300W	600W	900W	1200W
Peak Power		480W	680W	1050W	1260W
Output Level/Impedance		100V/33.3Ω	100V/16.6Ω	100V/11.1Ω	100V/8.3Ω
		70V/16.3Ω	70V/8.1Ω	70V/5.4Ω	70V/4Ω
		49V/8Ω	69.3V/8Ω	84.9V/8Ω	98V/8Ω
Input Sensitivity		1V/10kΩ			
T.H.D(AES17)	Rated Power	Less than 1%			
S/N (20kHz LPF)		More than 95dB			
Frequency Response (1W, ±3dB)		50Hz ~ 20kHz		60Hz ~ 20kHz	
Operating Temperature		-10°C ~ +40°C			
Operating Power		120VAC, 60Hz, 220-240VAC, 50/60Hz, DC 24V			
Power Consumption (1/8 Power)		130W		250W	
Weight (SET)		6.5kg/14.3lb	6.6kg/14.6lb	7.7kg/17lb	7.7kg/17lb
Dimensions (SET)		482(W)x88(H)x367(D)mm 19(W)x3.5(H)x14.4(D)in		482(W)x88(H)x420(D)mm 19(W)x3.5(H)x16.5(D)in	

* Design and specification are subject to be changed for the improvement of product quality without pre notice.

		DPA-300SO	DPA-600SO	DPA-900SO	DPA-1200SO
Rated Output Power		300W	600W	900W	1200W
Peak Power		480W	680W	1050W	1260W
Output Level/Impedance		100V/33.3Ω	100V/16.6Ω	100V/11.1Ω	100V/8.3Ω
		70V/16.3Ω	70V/8.1Ω	70V/5.4Ω	70V/4Ω
		49V/8Ω	69.3V/8Ω	84.9V/8Ω	98V/8Ω
Input Sensitivity		1V/10kΩ			
THD (AES17)	Rated Power	Less than 1%			
S/N (20kHz LPF)		More than 95dB			
Frequency Response (1W, ±3dB)		50Hz ~ 20kHz		60Hz ~ 20kHz	
Operating Temperature		-10°C ~ +40°C			
Operating Power		120VAC, 60Hz, 220-240VAC, 50/60Hz			
Power Consumption (1/8 Power)		130W		250W	
Weight (SET)		6.1kg/13.5lb	6.1kg/13.5lb	6.3kg/13.7lb	6.3kg/13.7lb
Dimensions (SET)		482(W)x88(H)x367(D)mm / 19(W)x3.5(H)x14.4(D)in			

* Design and specification are subject to be changed for the improvement of product quality without pre notice.

※ DIMENSIONS

DPA-300S/600S, DPA-300SO/600SO/900SO/1200SO

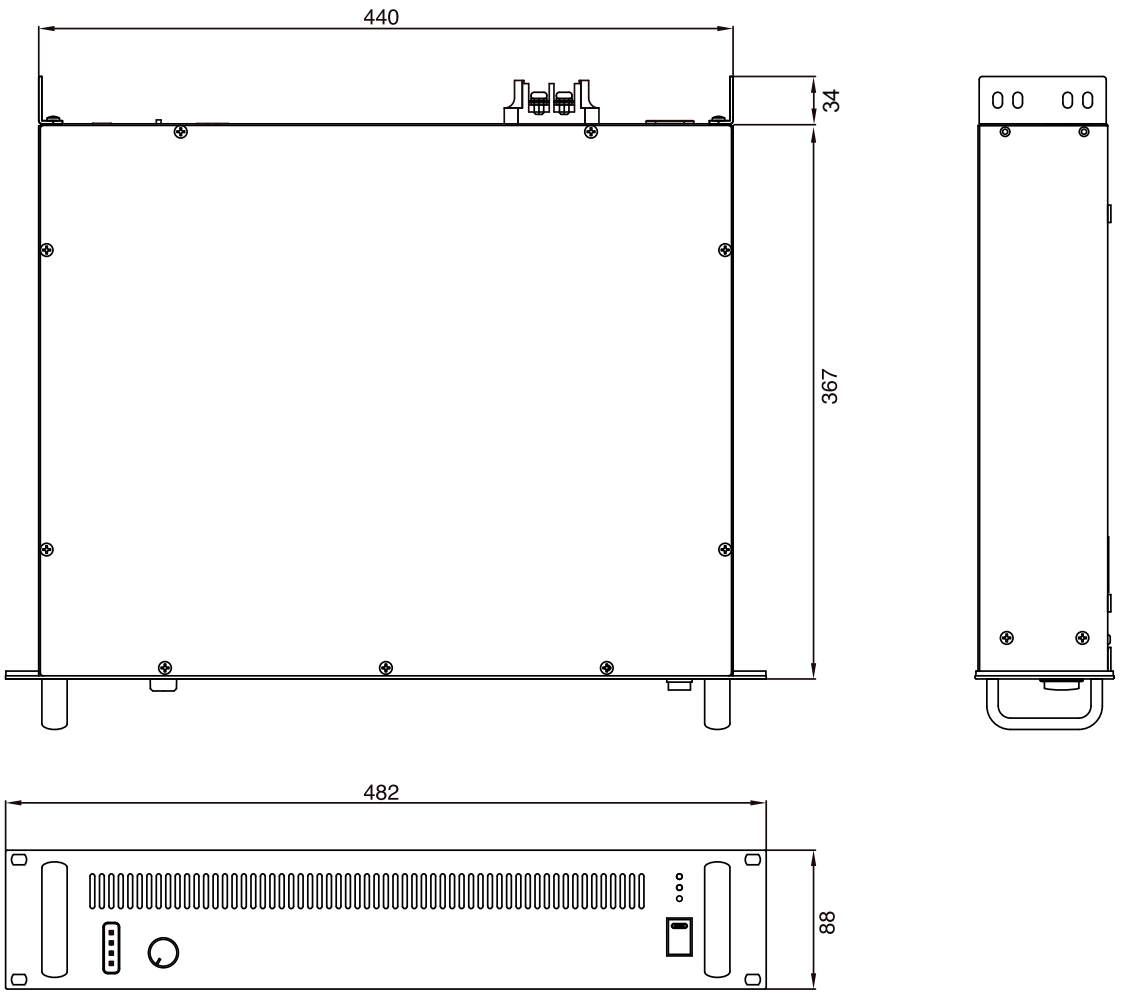

DPA-900S/1200S

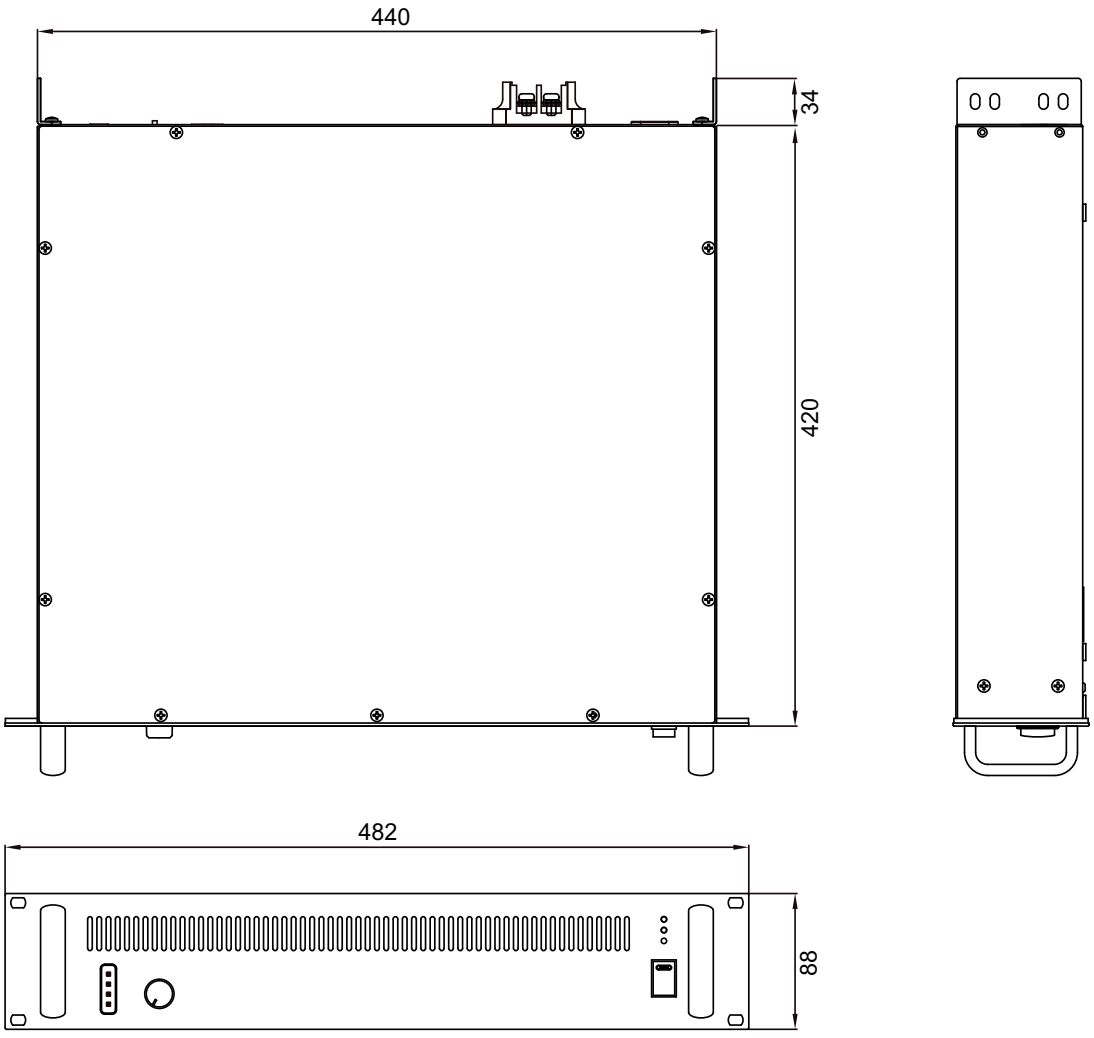

Service

Procedures
Take steps to insure the problem is not related to operator error or other products within the system. Information provided in the troubleshooting portion of this manual may help with this process. Once it is certain that the problem is related to the product contact your warranty provider as described in the warranty section of this manual.

Schematic
A Schematic is available by contacting your warranty provider.

Parts List
A Parts List is available by contacting your warranty provider.

Variations and Options

Variations
Products supplied through legitimate sources are compatible with local AC power requirements.

Options
No optional items are available for this product.

Warranty

Warranty terms and conditions vary by country and may not be the same for all products. Terms and conditions of warranty for a given product may be determined first by locating the appropriate country which the product was purchased in, then by locating the product type.

To obtain specific warranty information and available service locations contact Inter-M directly or the authorized Inter-M Distributor for your specific country or region.

Inter-M, Ltd. (Korea) began operations in 1983.

Since then, Inter-M has grown to become one of the largest manufacturers
of professional audio and commercial sound electronics equipment in the world.

Inter-M has gained worldwide recognition for its own branded products,
as well as private label manufacturing of electronics sold under other names (OEM).

The company is no longer just a Korean company, but rather a global company
that is truly international in scope, with factories and offices in Korea and China,
and sales and marketing operations located in Japan, Europe, and the U.S.A.

With more than 850 employees around the globe,
Inter-M is well-poised for further growth and expansion.

Inter-M Corporation
SEOUL OFFICE : 719, DOBONG-RO, DOBONG-GU, SEOUL, KOREA
TEL : +82-2-2289-8140~8, FAX : +82-2-2289-8149
Home Page : http://www.inter-m.com, E-mail : overseas@inter-m.com

MADE IN KOREA
October 2023 154167