Operation Manual

RM-02 Remote Dynamic Microphone



inter M

Warning

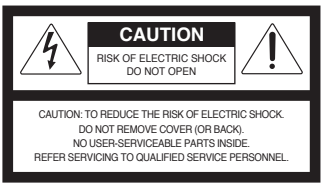

WARNING

To prevent fire or shock hazard, do not expose the unit to rain or moisture.



This symbol is intended to alert the user to the presence of uninsulated "dangerous voltage" within the product's enclosure that may be of sufficient magnitude to constitute a risk of electric shock to persons.



This symbol is intended to alert the user to the presence of important operation and maintenance (servicing) instructions in the literature accompanying the appliance.

Caution: These servicing instructions are for use by qualified service personnel only. To reduce the risk of electric shock, do not any perform any servicing other than that contained in the operating instructions unless you are qualified to do so.

Attentions: Pour prévenir les chocs électriques ne pas utiliser cette fiche polarisée avec un prolongateur, une prise de courant on une autre sortie de courant, sauf si les lames peuvent étre insérées à fond sans en laisser aucune partie à découvert.

*WARNING FOR YOUR PROTECTION PLEASE READ THE FOLLOWING-WATER AND MOISTURE: Unit should not be used near water(e.g. near a bathtub, washbowl, kitchen sink, laundry tub, in a wet basement, or near a swimming pool, etc). Care should be taken so than objects do not fall and liquids are not spilled into the enclosure through openings.

*Do not install this equipment in a confined space such as a book case or similar unit.

*This apparatus shall not be exposed to dripping or splashing and no objects filled with liquids, such vases, shall be placed on the apparatus.

*This apparatus shall be connected to a mains socket outlet with a protective earthing connection.

*It has heed to be easy to disconnect the device. To disconnect the device from power, separate AC input cable from inlet or unplug the AC Cord.

*CAUTION : These servicing instructions are for use by qualified service personnel only. To reduce the risk of electric shock, do not perform any servicing other than that contained in the operating instructions unless you are qualified to do so.

NOTE : This equipment has been tested and found to comply with the limits for a Class A digital device, pursuant to Part 15 of the FCC Rules. These limits are designed to provide reasonable protection against harmful interference when the equipment is operated in a commercial environment. This equipment generates, uses, and can radiate radio frequency energy and, if not installed and used in accordance with the instruction manual, may cause harmful interference to radio communications. Operation of this equipment in a residential area is likely to cause harmful interference in which case the user will be required to correct the interference at his own expense.

Contents

Welcome 2

Unpacking 2

Installation
- Environment 3
- Important Safety Instructions 3

Features 5

Constitution and Accessory 5

Name of Mic 6

Name of stand 7

Polar Pattern (Mic) 8

Response of frequency 8

Block Diagram (Stand) 9

Specifications 10

Service
- Procedures 11
- Schematic 11
- Parts List 11

Warranty 11

Welcome

A personal welcome to you from the management and employees of Inter-M

All of the co-workers here at Inter-M are dedicated to providing excellent products with inherently good value, and we are delighted you have purchased one of our products.

We sincerely trust this product will provide years of satisfactory service, but if anything is not to your complete satisfaction, we will endeavor to make things right.

Welcome to Inter-M, and thank you for becoming part of our worldwide extended family!

Unpacking

Please take a few minutes to read this manual to familiarize yourself with important information regarding installation, product features, and operation.

As with most electronic devices, ORIGINAL PACKAGING (OR EQUAL) IS REQUIRED in the unlikely event that the product needs to be returned for servicing.

Installation

Environment
Never place this product in an environment which could alter its performance or reduce its service life. Such environments usually include high levels of heat, dust, moisture, and vibration.

Important Safety Instructions

1. Read these instructions.
2. Keep these instructions.
3. Heed all warnings.
4. Follow all instructions.
5. Do not use this apparatus near water.
6. Clean only with dry cloth.
7. Do not block any ventilation openings. Install in accordance with the manufacturer's instructions.
8. Do not install near any heat sources such as radiators, heat registers, stoves, or other apparatus (including amplifiers) that produce heat.
9. Do not defeat the safety purpose of the polarized or grounding-type plug. A polarized plug has two blades with one wider than the other. A grounding type plug has two blades and a third grounding prong. The wide blade or the third prong are provided for your safety. If the provided plug does not fit into your outlet, consult an electrician for replacement of the obsolete outlet.
10. Protect the power cord from being walked on or pinched particularly at plugs, convenience receptacles, and the point where they exit from the apparatus.
11. Only use attachments/accessories specified by the manufacturer.
12. Use only with the cart, stand, tripod, bracket, or table specified by the manufacturer, or sold with the apparatus. When a cart is used, use caution when moving



the cart/apparatus combination to avoid injury from tip-over.

13. Unplug this apparatus during lightning storms or when unused for long periods of time.
14. Refer all servicing to qualified service personnel. Servicing is required when the apparatus has been damaged in any way, such as power-supply cord or plug is damaged, liquid has been spilled or objects have fallen into the apparatus, the apparatus has been exposed to rain or moisture, does not operate normally, or has been dropped.

- AVOID EXCESSIVE HEAT, HUMIDITY, DUST AND VIBRATION

  Keep the unit away from locations where it is likely to be exposed to high temperatures or humidity-such as near radiators, stoves, etc. Also avoid locations which are subject to excessive dust accumulation, or to vibration that could cause mechanical damage.
- AVOID PHYSICAL SHOCKS

  Strong physical shocks to the unit may cause damage. Handle the unit with care.
- DO NOT OPEN THE CASE OR ATTEMPT REPAIRS OR MODIFICATIONS YOURSELF

  This product contains no user-serviceable parts. Refer all maintenance to qualified Inter-M service personnel. Opening the case and/or tampering with internal circuitry voids the warranty.
- ALWAYS POWER OFF BEFORE MAKING CONNECTIONS

  Always turn the AC mains OFF before connecting or disconnecting cables. This is important to prevent damage to the unit itself as well as other connected equipment.
- HANDLE CABLES CAREFULLY

  Always plug and unplug cables (including the AC mains power cord) by gripping the connector, not the cord.
- CLEAN WITH A SOFT DRY CLOTH

  Never use solvents such as benzine or paint thinner to clean the unit. Wipe clean with a soft, dry cloth.

Features

- Unidirectional Dynamic microphone.
- Heavy die-casting zine construction base.

Constitution and Accessory

1. Stand of RM-02 x 1
2. Microphone of MC-02 x 1
3. Operation manual of RM-02

Name of Stand Ass'y

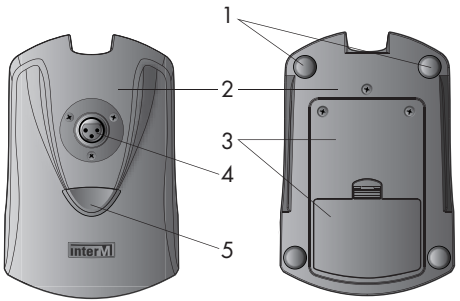

1. **RUBBER FOOT**

2. **STAND**

3. **STAND COVER**

4. **RECEPTACLE**

5. **TALK SWITCH**

Name of Goose neck Ass'y

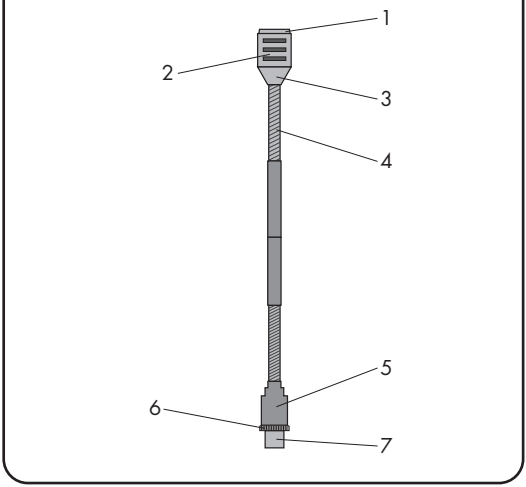

1. **WIND SCREE**

2. **UNIT**

3. **UNIT BASE**

4. **GOOSE NECK**

5. **CONNECTOR HOLDER**

6. **WRENCH BOLT**

7. **3P CONNECTOR**

Polar Pattern (Microphone)

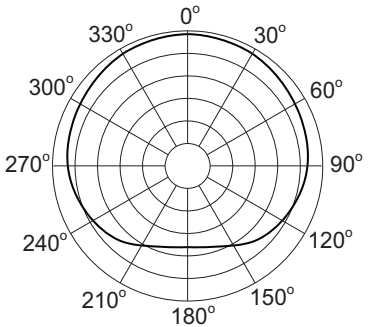

Response of Frequency

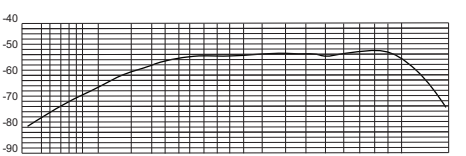

Block Diagram (Stand)

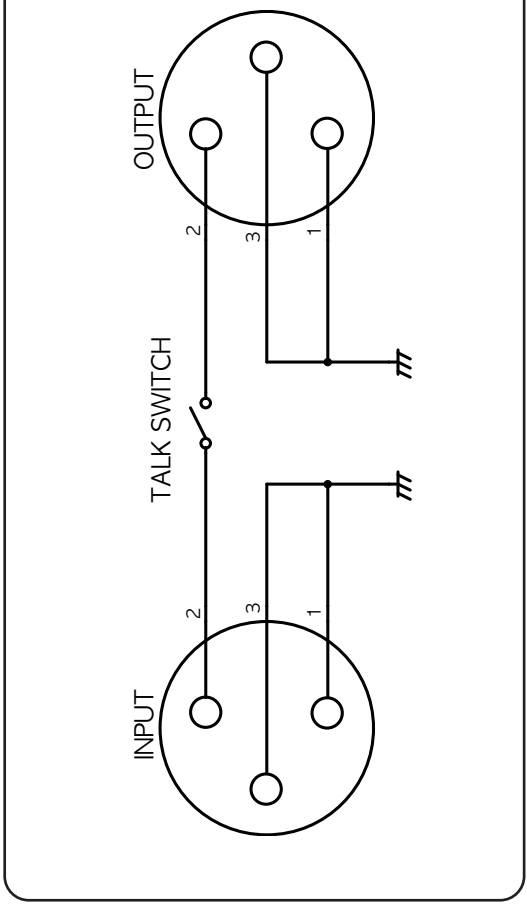

Specifications

		RM-02
Polar Pattern		Unidirectional
Type		Moving coil Dynamic microphone
Sensitivity/ Impedance		-52dB±3dB (0dB=1V/Pa at 1kHz)
Frequency Range		50Hz ~ 10kHz
Max. SPL		Over 130dB
Output Impedance		65dB
(signal- to–noise) ratio		600Ω ± 30%
Weight(set)		1.6 kg / 3.5 lB
Dimensions(set)	Stand	99(W) x 50(H) x 148(D)mm 3.9(W) x 2(H) x 5.8(D)in
	Mic	26.5(W) x 440(H) x 26.5(D)mm 1(W) x 17.3(H) x 1(D)in

* Specifications and design subject to change without notice.

Service

Procedures
Ensure the problem is not related to operator error, or external system devices, Once it is certain that the problem is related to the product contact your warranty provider as described in the warranty section of this manual.

Schematic
A Schematic is available by contacting your warranty provider.

Parts List
A Parts List is available by contacting your warranty provider.

Warranty

Warranty terms and conditions vary by country and may not be the same for all products. Terms and conditions of warranty for a given product may be determined first by locating the appropriate country which the product was purchased in, then by locating the product type.
To obtain specific warranty information and available service locations contact Inter-M directly or the authorized Inter-M Distributor for your specific country or region.

NOTE



NOTE



Inter-M, Ltd. (Korea) began operations in 1983.

Since then, Inter-M has grown to become one of the largest manufacturers of professional audio and commercial sound electronics equipment in the world.

Inter-M has gained worldwide recognition for its own branded products, as well as private label manufacturing of electronics sold under other names (OEM).

The company is no longer just a Korean company, but rather a global company that is truly international in scope, with factories and offices in Korea and China, and sales and marketing operations located in Japan, Europe, and the U.S.A.

With more than 850 employees around the globe, Inter-M is well-poised for further growth and expansion.

INTER-M AMERICAS, INC.
5666 CORPORATE AVE. CYPRESS, CA 90630
TEL : +1-714-828-2200, FAX : +1-714-828-2210
HOME PAGE : HTTP://WWW.INTER-M.NET, E-MAIL : INFO@INTER-M.NET

INTER-M Corporation
SEOUL OFFICE : 719, DOBONG-RO, DOBONG-GU, SEOUL, KOREA
TEL : +82-2-2289-8140~8, FAX : +82-2-2289-8149
Home Page : http://www.inter-m.com, E-mail : overseas@inter-m.com

MADE IN KOREA
July 2021