Remote Microphone

RM-01



RM-01



Overview

The RM-01 is an ideal remote paging microphone with push-to-talk and push-to-chime control. It features a unidirectional dynamic microphone with a 14" gooseneck. The microphone has a frequency range of 60 Hz to 18 kHz with an impedance of 400 Ω and a sensitivity of -75db. The stand is of heavy diecast-zinc construction to provide stability and minimize noise caused by the operator touching the stand.

Features

- Unidirectional Dynamic Microphone
- 14" Gooseneck
- Frequency response 60 Hz to 18 kHz
- Heavy diecast-zinc construction base
- Mic On/Off Switch
- Remote Chime Switch
- Sensitivity -75 dB ±3 dB(0 dB=1 V/μ bar@1 kHz)
- Impedance 400 Ω

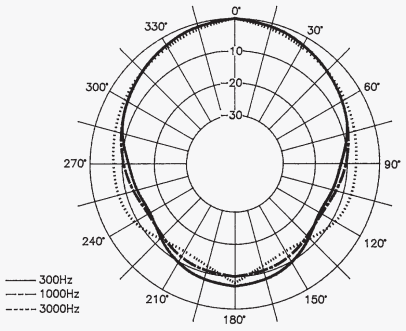

POLAR PATTERN

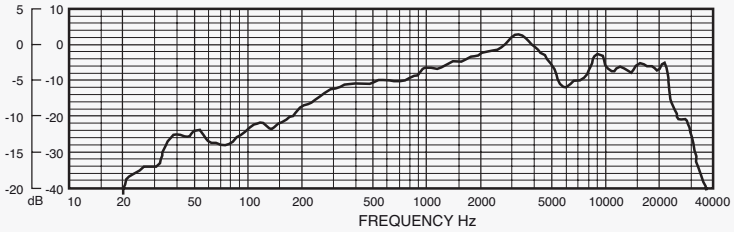

RESPONSE

Specifications

	RM-01
TYPE	Dynamic Microphone
POLAR PATTERN	UNIDIRECTIONAL
SENSITIVITY (0 dB=1 V/Pa at 1 kHz)	-75 ±3 dB
IMPEDANCE	400 Ω
FREQUENCY RESPONSE	60 Hz~18 kHz
WEIGHT(SET)	1.4 kg/3 lbs
DIMENSIONS(SET)	90(W)×45(H)×133(D) mm/3.5(W)×1.7(H)×5.2(H) in

NAME OF GOOSE NECK ASS'Y



1 WIND SCREEN

2 UNIT

This unit which range is from 60Hz to 16kHz can make sound.

3 UNIT BASE

This base settles unit, and made of aluminium ware to protect goose neck not to be lower.

4 GOOSE NECK

This goose neck can adjust the direct of unit without moving stand.

5 CONNECTOR HOLDER

This case is in order to connect stand to connector.

6 3P CONNECTOR

XLR connector of stand.

7 WRENCH BOLT

This screw solidifies mounting between goose neck and connector holder.

NAME OF STAND ASS'Y

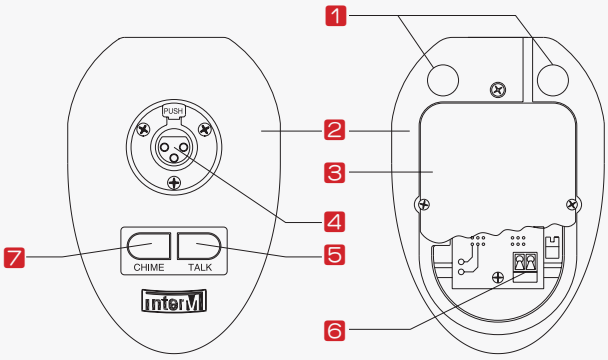

1 RUBBER FOOT

This rubber foot of stand avoid sliding on the glass or table.

2 STAND

This stand made of heavy Zn diecasting which can minimize touch noise.

3 STAND COVER

4 RECEPTACLE

Input signal through 3p connector of goose neck becomes sound at this part of stand ass'y

5 TALK SWITCH

After press talk switch, the microphone does work and press again is off.

6 TERMINAL BLOCK

This block is connected with remote chime. For connecting remote chime, after open stand cover connect it with ⊖ driver.

7 CHIME SWITCH

If the chime appliance is connected with the terminal block, can produce sound.

CONNECTION FOR REMOTE CHIME

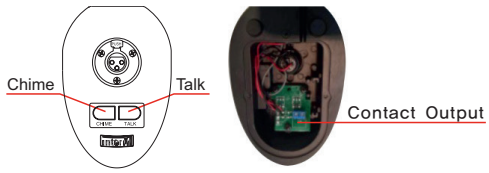

After opening the cover of the stand bottom, connect the Receiver or the Remote Chime for the system to the 2P terminal block.

APPLICATION 1

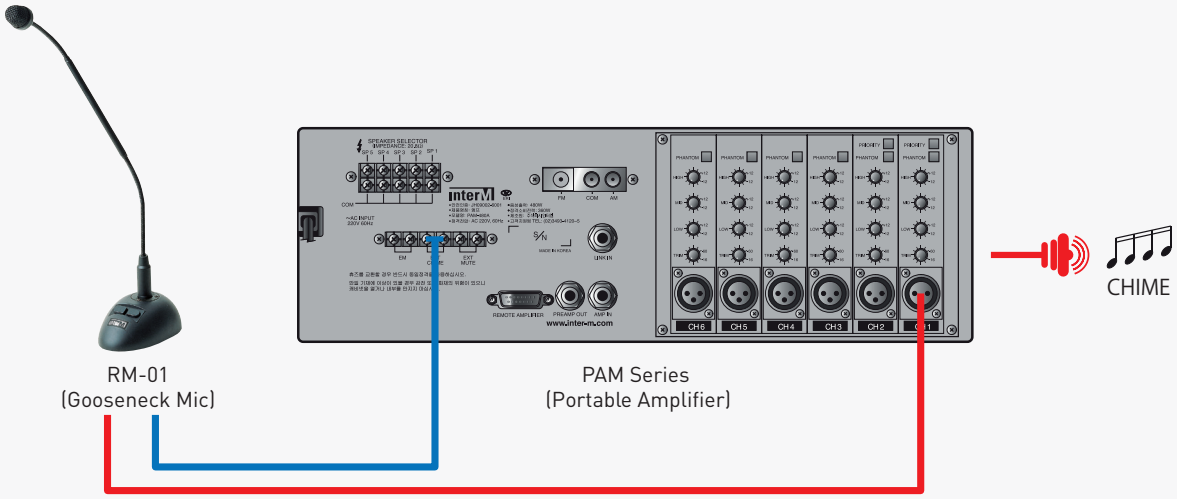

APPLICATION 2

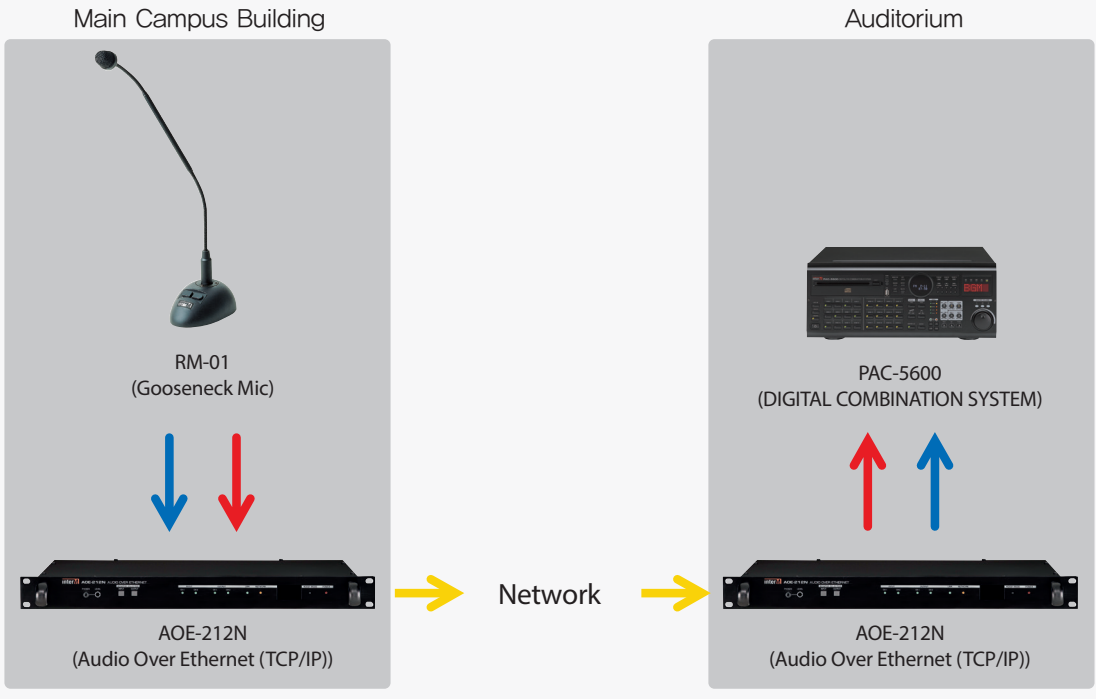

BLOCKDIAGRAM

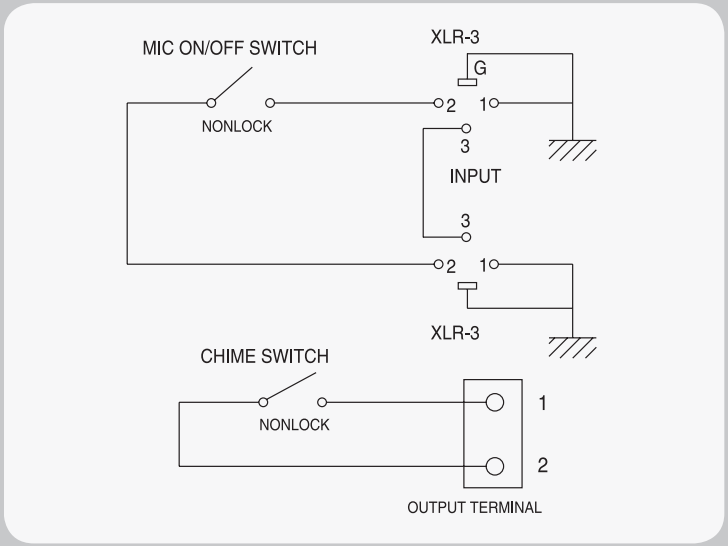

COMPARATIVE TABLE



RM-01



RMC-01

RM-01

- Moving Coil Dynamic Microphone
- Remote Chime Switch
- MIC On/Off Switch
- Sold separately
  (MIC : MC-01/BASE : RM-01BS)

RMC-01

- Electret Condenser Microphone
- Remote Chime Switch
- MIC On/Off Switch
- Sold separately
  (MIC : CMC-01/BASE : RMC-01BS)

	RM-01	RMC-01
TYPE	Dynamic Mic	Condenser Mic
POLAR PATTERN	UNIDIRECTIONAL	
SENSITIVITY (0 dB=1 V/Pa at 1 kHz)	-75 dB ±3 dB	-47 dB ±3 dB
IMPEDANCE	400 Ω	680 Ω
FREQUENCY RESPONSE	60 Hz~18 kHz	100 Hz~16 kHz
POWER	-	DC 1.5 V
WEIGHT(SET)	1.4 kg/3 lbs	
DIMENSIONS(SET)	90(W) x 45(H) x 133(D) mm 3.5(W)×1.7(H)×5.2(H) in	

Memo

Memo

Inter-M Corp. (IMK)

719, Dobong-ro, Dobong-gu, Seoul, Korea
Overseas Sales Team
Tel_ +82-2-2289-8141~7 **Fax_** +82-2-2289-8149 **E-mail_** overseas@inter-m.com **www.inter-m.com**

※ Design and specification are subject to be changed for the improvement of product quality without pre notice.

2015. 10. V4