Operation Manual

CD/MP3/WMA/WAV Player

CD-610U



*Rack mount products in the Western Hemisphere (North America, South America, and the Caribbean) do not have handles installed due to customer preference.

interM

Welcome

A personal welcome to you from the management and employees of Inter-M

All of the co-workers here at Inter-M are dedicated to providing excellent products with inherently good value, and we are delighted you have purchased one of our products.

We sincerely trust this product will provide years of satisfactory service, but if anything is not to your complete satisfaction, we will endeavor to make things right.

Welcome to Inter-M, and thank you for becoming part of our worldwide extended family!





This symbol is intended to alert the user to the presence of uninsulated “dangerous voltage” within the product’s enclosure that may be of sufficient magnitude to constitute a risk of electric shock to persons.



This symbol is intended to alert the user to the presence of important operation and maintenance (servicing) instructions in the literature accompanying the appliance.

Caution: To prevent electric shock do not use this (polarized) plug with an extension cord, receptacle or other outlet unless the blades can be fully inserted to prevent blade exposure.

Attentions: Pour prévenir les chocs électriques ne pas utiliser cette fiche polarisée avec un prolongateur, une prise de courant on une autre sortie de courant, sauf si les lames peuvent étre insérées à fond sans en laisser aucune partie à découvert.

WARNING

To prevent fire or shock hazard, do not expose the unit to rain or moisture.

*WARNING FOR YOUR PROTECTION PLEASE READ THE FOLLOWING-WATER AND MOISTURE: Unit should not be used near water(e.g. near a bathtub, washbowl, kitchen sink, laundry tub, in a wet basement, or near a swimming pool, etc). Care should be taken so than objects do not fall and liquids are not spilled into the enclosure through openings.
*Do not install this equipment in a confined space such as a book case or similar unit.
*This apparatus shall not be exposed to dripping or splashing and no objects filled with liquids, such vases, shall be placed on the apparatus.
*This apparatus shall be connected to a mains socket outlet with a protective earthing connection.
*It has heed to be easy to disconnect the device. To disconnect the device from power, separate AC input cable from inlet or unplug the AC Cord.
*The socket-outlet shall be installed near the equipment and shall be easily accessible.

CAUTION

*These servicing instructions are for use by qualified service personnel only. To reduce the risk of electric shock, do not perform any servicing other than that contained in the operating instructions unless you are qualified to do so.

NOTE

*This equipment has been tested and found to comply with the limits for a Class A digital device, pursuant to Part 15 of the FCC Rules. These limits are designed to provide reasonable protection against harmful interference when the equipment is operated in a commercial environment. This equipment generates, uses, and can radiate radio frequency energy and, if not installed and used in accordance with the instruction manual, may cause harmful interference to radio communications. Operation of this equipment in a residential area is likely to cause harmful interference in which case the user will be required to correct the interference at his own expense.

Contents

Unpacking 2

Installation
Environment 2
Important Safety Instructions 2

Features 3

Additional Descriptions 3

How to manage the Compact Disc (CD) 4

Front Panel 5

Rear Panel 7

Operation Method 8

Block Diagram 11

Specifications 12

Service 14

Warranty 14

Unpacking

Although your CD-610U is neither complicated nor difficult to operate, we recommend you take a few minutes to read this brief manual and familiarize yourself with the important information regarding product features, setup and operation.

As with most electronic devices, we strongly recommend you to retain the original packaging. In the unlikely event the product must be returned for servicing, the original packaging (or reasonable equivalent) is required.

Installation

Environment

Never place this product in an environment which could alter its performance or reduce its service life. Such environments usually include high levels of heat, dust, moisture, and vibration.

IMPORTANT SAFETY INSTRUCTIONS

1. Read these instructions.
2. Keep these instructions.
3. Heed all warnings.
4. Follow all instructions.
5. Do not use this apparatus near water.
6. Clean only with dry cloth.
7. Do not block any ventilation openings. Install in accordance with the manufacturer's instructions.
8. Do not install near any heat sources such as radiators, heat registers, stoves, or other apparatus (including amplifiers) that produce heat.
9. Do not defeat the safety purpose of the polarized or grounding-type plug. A polarized plug has two blades with one wider than the other. A grounding type plug has two blades and a third grounding prong. The wide blade or the third prong are provided for your safety. If the provided plug does not fit into your outlet, consult an electrician for replacement of the obsolete outlet.
10. Protect the power cord from being walked on or pinched particularly at plugs, convenience receptacles, and the point where they exit from the apparatus.
11. Only use attachments/accessories specified by the manufacturer.
12. Use only with the cart, stand, tripod, bracket, or table specified by the manufacturer, or sold with the apparatus. When a cart is used, use caution when moving the cart/apparatus combination to avoid injury from tip-over.
13. Unplug this apparatus during lightning storms or when unused for long periods of time.
14. Refer all servicing to qualified service personnel. Servicing is required when the apparatus has been damaged in any way, such as power-supply cord or plug is damaged, liquid has been spilled or objects have fallen into the apparatus, the apparatus has been exposed to rain or moisture, does not operate normally, or has been dropped.



Features

- Most enhanced 3 beam type mechanism
Highly maintain the shock absorption and stability with anti-shock automotive mechanism.

- MP3/WMA/WAV
Can play the CD-DA, MP3, WMA and WAV format

- USB Playback
MP3 files in a USB can be played directly.

- Auto Play
Automatically play the preset source when the unit is turned on.

- RS-232C
Can be controlled by a remote controller such as AMX or CRESTRON system.

- Emergency Power Back Up (DC24V) capability
The unit operates on a DC24 V battery power supply for emergency back up without UPS.

Additional Descriptions

- MP3 (MPEG AUDIO LAYER-3)
MP3 is one of music file formats that can contain music with stereo sound quality as good as audio which is a type of MPEG as audio, video compression standards. Compression rate is 1Mb by 1 and thus about 3~ 5 minutes are sufficient if recording songs of 3~ 5 min or so. Differently from audio a music file made of MP3 can contain over 130 songs for popular songs or folk songs and playing also about 10 hours. MP3 clears frequency range for a human being not to discernable and advantage to compact it to 1/12 or so while maintaining music as sound quality equivalent to CD level.
Example, deriving a song in a music CD while maintaining music as sound quality equivalent to CD becomes capacity of 50MB or so but if compressing and converting it to a MP3, size of the MP3 reduces to 4~5MB.

- WMA (WINDOWS MEDIA AUDIO)
WMA is a multimedia compression method developed by Microsoft Corporation and is technology compress only music from 'Window Media Technologies', and provides same sound quality as format MP3 up to 128Kbps, which has lower 64Kbps format than MP3.

- AMX / CRESTRON Interface
AMX or CRESTRON remote control system can be used with this RS-232C terminal.
The maximum cable length should be below 15m.
1. RS-232 PIN OUT

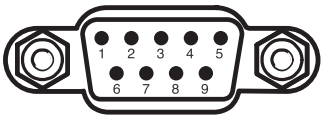

Pin	1	2	3	4	5	6-9
Used	X	Receive	Transmit	X	Ground	X

2. Remote control function
Play/Pause, Stop, Skip down/up, Search Down/up, etc. can be controlled by a remote controller.
3. Downloading of the control protocol
You can download the protocol at the home page (www.inter-m.com).

How to manage the Compact Disc (CD)

The CD-6208 is designed for the playback of CD-DA, MP3, or WMA.
Please use a CD with following mark:



- Make the label side upward when inserting a CD in the disc slot.
- Open a CD case with holding the right ending part of a case with the left hand and hold the both sides with the right hand from below.
- Take off the CD with lightly holding both sides with the right hand while pressing the center of the case with index finger.
- Lightly wipe out the CD with a soft cloth if fingerprint or dirt is stained on the signal side (opposite the label side). Wiping out dirt or fingerprint gently with a smooth cloth. Keep disc clean and store it in its case when not being played.
- Do not use any record spray, anti-static solutions, benzene and paint thinner or other chemical agents to clean a CD. The surface of a CD may be damaged by these chemical agents.
- Please keep the disc in its case after use to avoid serious scratches that could cause the laser pickup to skip.
- Keep discs away from direct sunlight, and places of high heat and humidity. It may cause deformation.
- Do not paste papers, etc. to the label side. Do not write on the disc with a ballpoint pen.
- Only use circular compact discs, Avoid using non-circular promotional, etc. discs.
- The CD-610 cannot play unfinalized CD-R/RW discs.

Front Panel

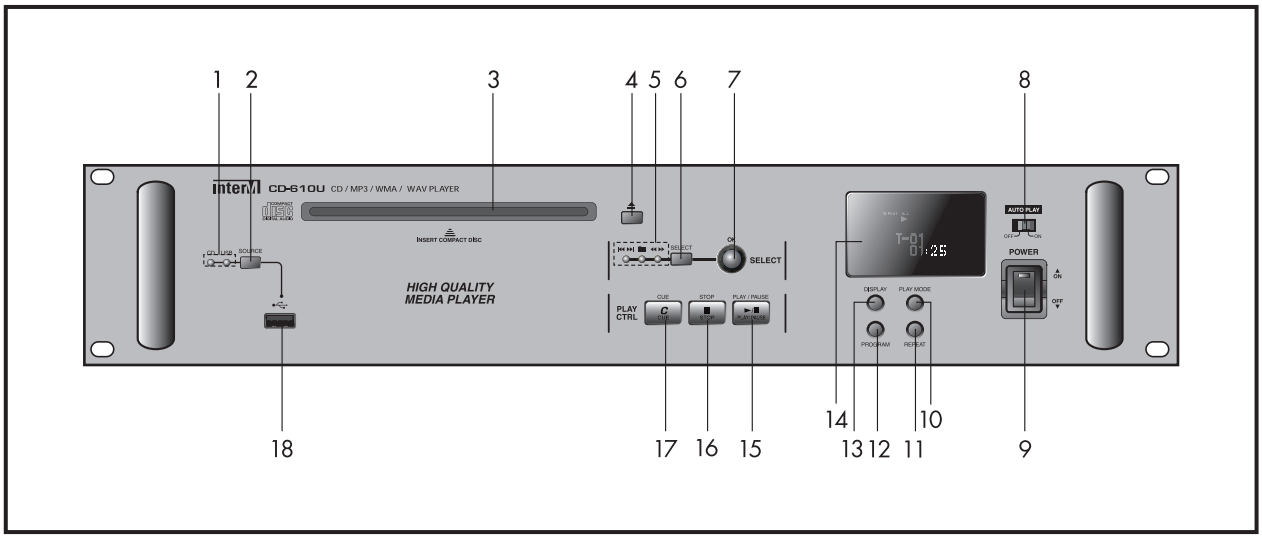

1. SOURCE SELECT LED
Indicating LED for the selected source in order of CD=>USB.

2. SOURCE SELECT BUTTON
Push this button to select the source in order of CD=>USB.

3. DISC SLOT
Insert a CD into the slot, label side upwards.
The unit will pulls the disc when the CD is partially inserted.
※ DO NOT INSERT a CD of 8 cm size into the slot.

4. EJECT BUTTON
Ejects a disc.

5. SELECT LED
The LEDs indicates the Skip (⏮ ⏭), Folder (🖿) or Search (◀◀ ▶▶) mode.

6. SELECT BUTTON
Use this button to select the Skip (⏮ ⏭), Folder (🖿) or Search (◀◀ ▶▶) mode.
After select the mode, skip, folder or search function can be performed using the ENCODER switch.
- ⏮ ⏭ (Skip) : skips a track or a folder.
- 🖿 (Folder) : skips a folder.
- ◀◀ ▶▶ (Search) : turning the ENCODER switch to the clockwise, then it searches forward continuously. Turning the encoder switch to the counter clockwise, then it searches backward continuously. Press the OK button to stop searching and playback the track.

7. ENCODER SWITCH / OK BUTTON

Rotates this ENCODER switch to perform skip, folder change or search function after select the Skip (⏮ ⏭), Folder (📁) or Search (◀◀ ▶▶) mode. In menu mode, turning this ENCODER switch can changes the menu and pushing this button can change the setting.

Changes the menu and pushing this button can change the setting.

8. AUTO PLAY SWITCH

By setting this switch on, the preset source of a memory disc, CD or USB is automatically played when the unit is turned on.

Playback starts from the first track of the preset source.

9. POWER SWITCH

Use this switch to turn the power on or off.

10. PLAY MODE

This Button is used to play selected song. If Play Mode button is pressed during the playback, song will finish playing and will be in pause mode. Press Play button to select next song. If selected song is the last song, function will be in stop mode.

11. REPEAT BUTTON

Use this button to select repeat mode, REPEAT 1, REPEAT GROUP, or REPEAT ALL.

12. PROGRAM UPDATE BUTTON

Only use when system program need to be updated.

13. DISPLAY BUTTON

Use this button to select time mode, playback time or remaining time.

14. DISPLAY WINDOW

The display shows the current status of the unit or the current menu setting.

15. PLAY / PAUSE BUTTON

Use this button to play or pause.

16. STOP BUTTON

Use this button to stop the playback.

17. CUE BUTTON

When the CUE is on and a track is selected, the point where sound begins on that track is located to and the unit enters into pause mode.

When the play button is pressed, playback begins at exactly that point.

18. USB PORT

Use this terminal to mount USB memory. The unit supports USB1.1

When CD LED is on, USB will not be played.

When USB LED is on, CD will not be played.

Rear Panel

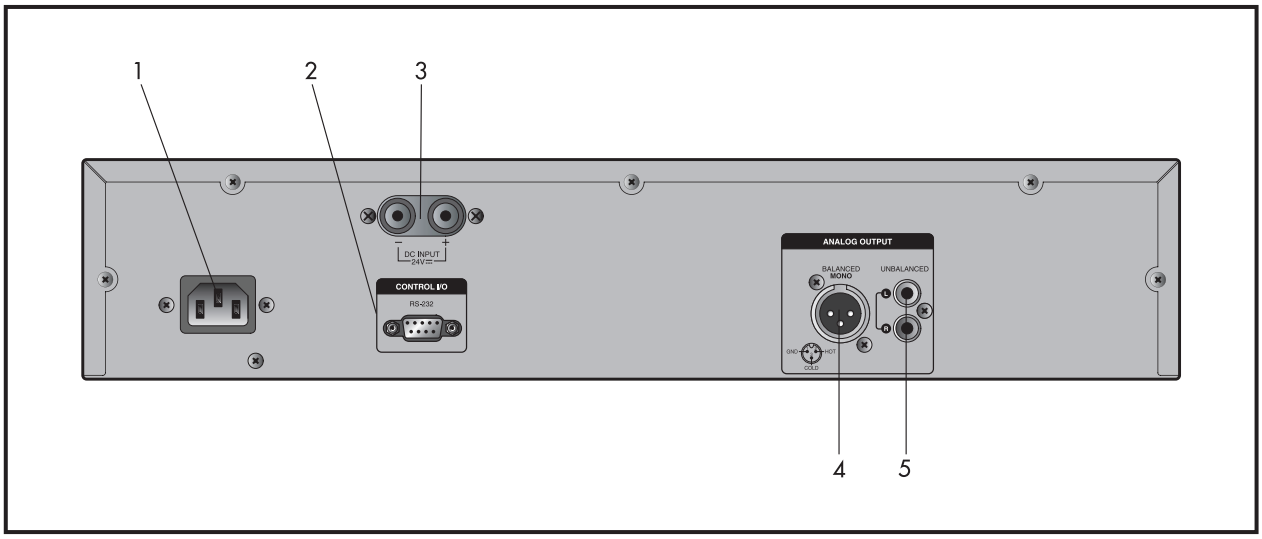

1. **AC INLET**
   Connect the power cable supplied with the CD-610U.

2. **RS-232C TERMINAL**
   This terminal allows control by a remote controller such as AMX /CRESTRON etc.

3. **DC INPUT**
   DC 24V Power input terminal and can be used as back up power.

4. **ANALOG MONO OUTPUT**
   MONO output terminal provides the mixed signal of L and R channel outputs.

5. **ANALOG L/R OUTPUT (RCA)**
   These terminals provide L and R channel signal output.

Operation Method

1. PLAY / PAUSE

1) How to play CD

(1) Insert a disc into the slot, label side upwards.

(2) Select CD mode by pressing the SOURCE button.
If there is no disc, the display will indicate as NO DISC.

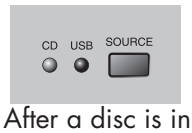

(3) After a disc is inserted, the display will indicate the information as below.

- CD-DA : displays total number of tracks and total playback time.



Track : 27 tracks
Total Playback Time: 1hour 19min. 10sec.

- CD-MP3 : displays total number of folders and total number of files.

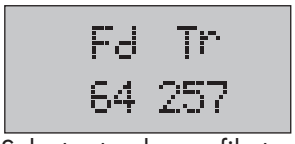

64 folders / 257 files

(4) Select a track or a file to playback using the select button and the encoder switch.

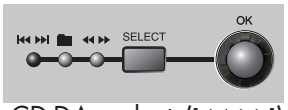

- CD-DA: select (⏮ ⏭) using the SELECT button and select the track to playback by turning the ENCODER switch.
- MP3
  - · Select 🖿 using the SELECT button and select the folder by turning the ENCODER switch.
  - · Select (⏮ ⏭) using the SELECT button and select the track to playback by turning the ENCODER switch.

(5) Press the ⏯ PLAY/PAUSE button to play.
To skip the track during playback, select (⏮ ⏭) using the SELECT button and select the track to playback by turning the ENCODER switch.

(6) Press the ⏯ PLAY/PAUSE button again to pause. Press the ⏹ STOP button to stop.

※ Note : 1. A disc which surface status is not good or a disc which format is not compatible cannot be played and stopped.
2. When a disc format is not compatible, the window displays “NO FILE”.
3. When a disc is inserted upside down, then the window displays “READING ERROR”.

Check the disc status and format because these are not failure of this unit.

2) How to play USB

(1) Insert a USB memory to the USB terminal.



(2) Press the SOURCE select button to select the USB mode.

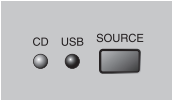

(3) Total numbers of the folders and total numbers of files to play are displayed.

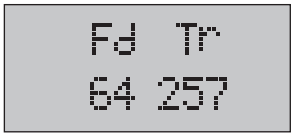

64 folders / 257 files

If no files to play, then "NO FILE" is displayed.
If a USB memory is not inserted "NO USB" is displayed.

(4) Select a track to playback using the SELECT button and the ENCODER switch.

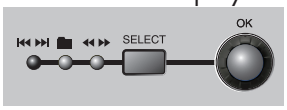

- Select 🖿 using the SELECT button and select a folder by turning the ENCODER switch.
  🖿 can be selected only when the USB has folder.
- Select ⏮ ⏭ using the SELECT button and select a track to playback by turning the the ENCODER switch.

(5) Press the 

button to play.
To skip the track during playback, select ⏮ ⏭ using the SELECT button and select the track to playback by turning the ENCODER switch.

(6) Press the 

button again to pause.

Press the 

button to stop.

※ Note : When the track which status is not good or which format is not compatible, the window displays "PLAY ERROR". The error track is skipped and playback the next track.

2. REPEAT



(1) REPEAT 1: Playback the file selected repeatedly.
(2) REPEAT GROUP: Playback the GROUP selected repeatedly.
(3) REPEAT ALL: Playback the disc, USB, or a memory disc repeatedly.

3. AUTO PLAY

AUTO Play is the function to preset the source (CD, USB or Memory disc) to playback and to playback the preset source when the power of the CD-610U is turned on.

1) AUTO PLAY setting



To set the AUTO PLAY function, set the AUTO PLAY switch to ON position.

※ Note : When the unit is powered on when the Auto Play switch is in ON position, the unit will detect if CD is inseted.
If the unit detects a CD, It will automatically play the CD with ALL REAPEAT mode.
If the unit reliezes that there is no CD then It will try to detect if USB is inserted then It will automatically play the USB with ALL REAPEAT mode.
If there are no CD or USB inserted into the unit, the display will be appear as "NO USB".
When the unit is powered on when the Auto Play switch is in OFF position, the unit is in stop mode.

4. CUE



Press the CUE button and select a track, then the point where music begins.
Press the PLAY button to start playback at exactly that point.
When the CUE button is pressed during playback, then it goes to the point where music begins on the track and enters into pause mode.

5. EJECT


Press EJECT button to eject a disc.

6. DISPLAY MODE

Press the 

button to select the time mode which is the played time or the remaining time.

7. CAPACITY

(1)The maximum playback of CD-DA is 99 tracks.
(2)The maximum playback of MP3 CD is 499 files.
(3)The maximum playback of a USB is 499 files.

8. RESUME PLAY

Regardless of AUTO PLAY ON/OFF the unit power is interrupted while CD or USB is playing, when power is back on it will play the beginning of the song that stopped causing by power interruption.

※ Note : 1. If CD was produced with both Extra CD and Mixed CD with CD-DA and MP3 files, both CD-DA and MP3 tracks will play.
2. CD-610U can play the MP3 file which has 44.1kHz sampling frequency and 64kbps~320kbps bit rates.
CD-610U can play the WMA file which has 44.1kHz sampling frequency and 64kbps~320kbps bit rates, or 48kHz sampling frequency and 64kbps~192kbps bit rates.

※ Note

1. DO NOT TURN OFF THE POWER during formatting the memory disc, it causes the memory disc fault.
   If the memory disc failure happens, then "ERROR 2" or "READING ERROR" displays. Consult with the service personal.
2. While supporting up to 32G USB memory, depending on the manufacturer, 16G and up may hinder proper operation of Auto Play function. 8G USB functions properly.
3. When copying music files in a USB to the internal memory disc, the track number of the copyed files from the USB to the internal memory is numbered according to the order that files are copyed to the USB. If playback sequence is needed, then copy files to the USB which has no MP3 files in the order of wanted playback sequence respectively.
4. Do not insert a CD of 8 cm size into the slot.

Block Diagram

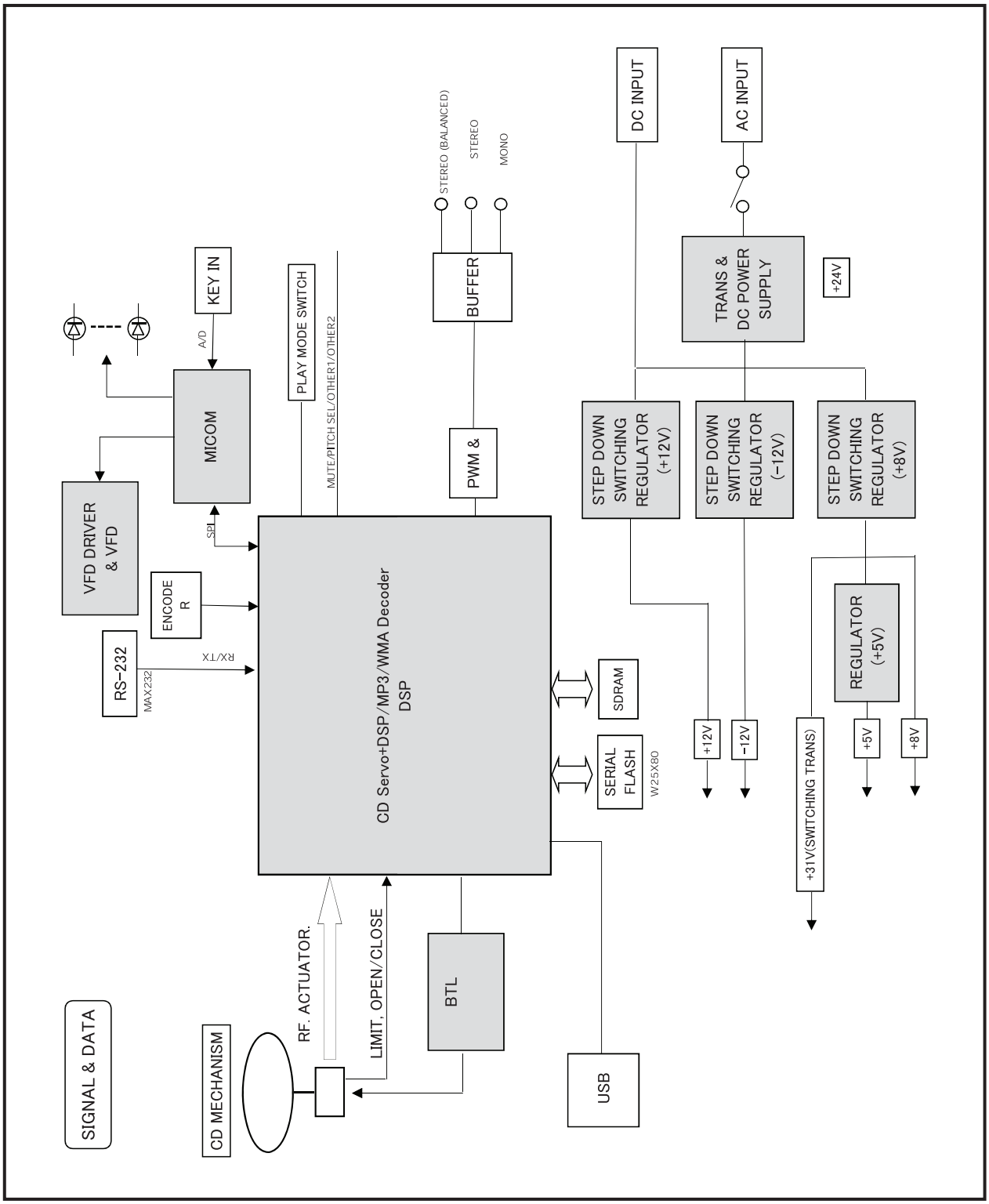

Specifications

	CD-610U
DISC (CD, CD-R, CD-RW)	12cm
Number of Channels	3CH(L, R, MONO)
Frequency Response (20Hz ~ 20kHz)	+0.5/-2.0dB
T.H.D. (20kHz LPF)	0.01%(NOR), 0.03% less(LIMIT)
S/N (20kHz LPF, A-WTD)	84dB(NOR), 80dB(LIMIT)
AUDIO Output Level (Max)	+6dBV±2dB (2Vrms)
AUDIO Output Connectors	RCA: L/R, XLR: MONO
Formats	CD-DA / MP3 / WMA / WAV
Operating Temperature	-10℃ ~ +40℃
Power Source	USA / Canada 120VAC 60Hz / DC 24V
	UK / Europe 230VAC 50Hz / DC 24V
	Austrailia 240VAC 50Hz / DC24V
Weight (SET)	4.7kg/10.4lb
Dimensions (SET)	482(W)×88(H)×280(D)mm/19(W)x3.5(H)x11(D)in

* Design and specification are subject to be changed for the improvement of product quality without pre notice.

※ DIMENSIONS

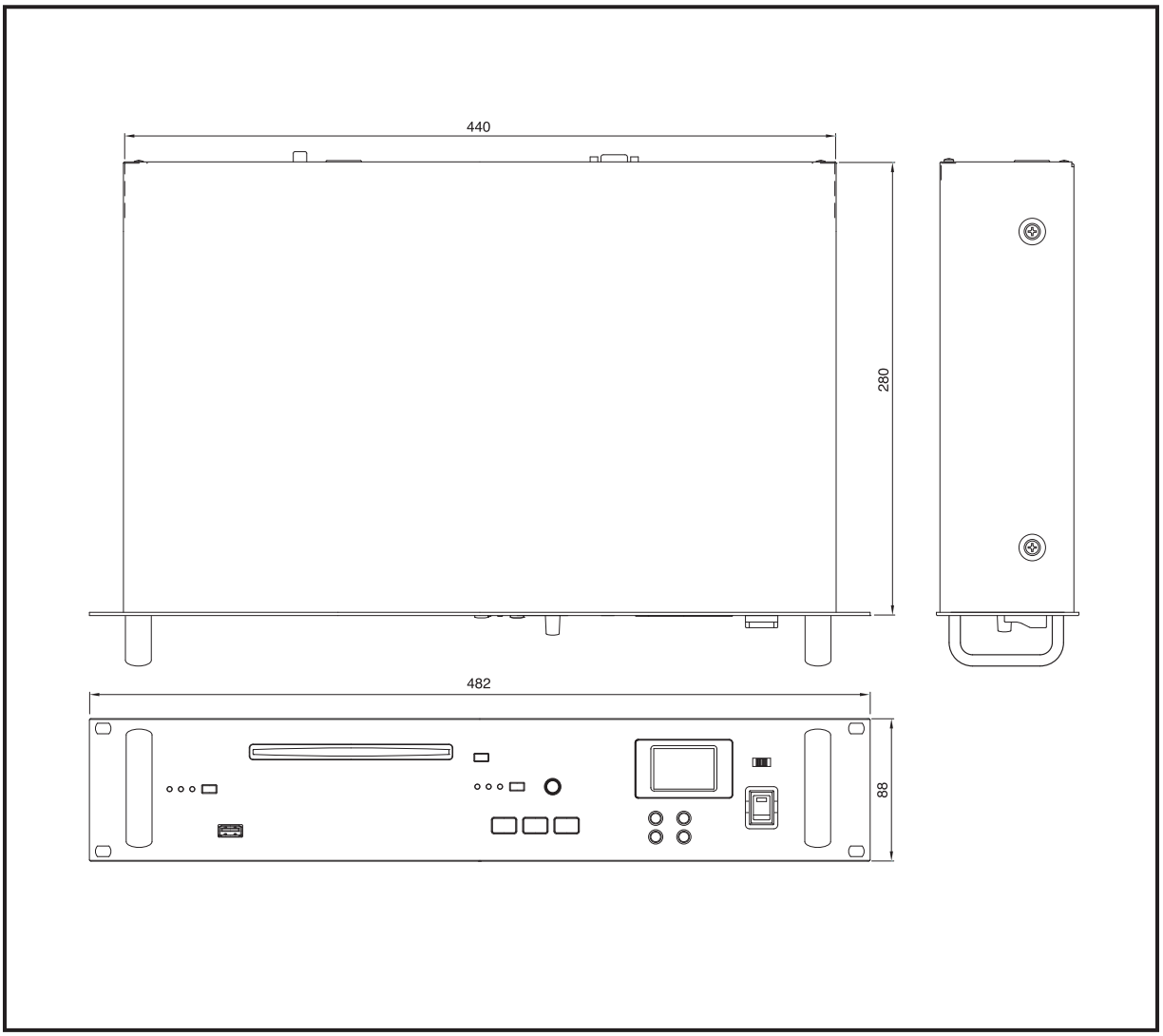

Service

Procedures
Take steps to insure the problem is not related to operator error or other products within the system. Information provided in the troubleshooting portion of this manual may help with this process. Once it is certain that the problem is related to the product contact your warranty provider as described in the warranty section of this manual.

Schematic
A Schematic is available by contacting your warranty provider.

Parts List
A Parts List is available by contacting your warranty provider.

Warranty

Warranty terms and conditions vary by country and may not be the same for all products. Terms and conditions of warranty for a given product may be determined first by locating the appropriate country which the product was purchased in, then by locating the product type.

To obtain specific warranty information and available service locations, contact Inter-M directly or the authorized Inter-M Distributor for your specific country or region.

NOTE

Inter-M, Ltd. (Korea) began operations in 1983.

Since then, Inter-M has grown to become one of the largest manufacturers
of professional audio and commercial sound electronics equipment in the world.

Inter-M has gained worldwide recognition for its own branded products,
as well as private label manufacturing of electronics sold under other names (OEM).

The company is no longer just a Korean company, but rather a global company
that is truly international in scope, with factories and offices in Korea and China,
and sales and marketing operations located in Japan, Europe, and the U.S.A.

With more than 850 employees around the globe,
Inter-M is well-poised for further growth and expansion.

Inter-M Americas, INC.
5666 CORPORATE AVE. CYPRESS, CA 90630
TEL : +1-714-828-2200, FAX : +1-714-828-2210
Home Page : http://www.inter-m.net, E-mail : info@inter-m.net

Inter-M Corporation
SEOUL OFFICE : 719, DOBONG-RO, DOBONG-GU, SEOUL, KOREA
TEL : +82-2-2289-8140~8, FAX : +82-2-2289-8149
Home Page : http://www.inter-m.com, E-mail : overseas@inter-m.com

MADE IN KOREA
June 2021 154206