Operation Manual

Telephone Paging

TP-6231A



* Rack mount products in the Western Hemisphere(North America, South America, and the Caribbean) do not have handles installed due to customer preference.

interM

Welcome

A personal welcome to you from the management and employees of Inter-M

All of the co-workers here at Inter-M are dedicated to providing excellent products with inherently good value, and we are delighted you have purchased one of our products.

We sincerely trust this product will provide years of satisfactory service, but if anything is not to your complete satisfaction, we will endeavor to make things right.

Welcome to Inter-M, and thank you for becoming part of our worldwide extended family!





This symbol is intended to alert the user to the presence of uninsulated “dangerous voltage” within the product’s enclosure that may be of sufficient magnitude to constitute a risk of electric shock to persons.



This symbol is intended to alert the user to the presence of important operation and maintenance (servicing) instructions in the literature accompanying the appliance.

Caution: To prevent electric shock do not use this (polarized) plug with an extension cord, receptacle or other outlet unless the blades can be fully inserted to prevent blade exposure.

Attentions: Pour prévenir les chocs électriques ne pas utiliser cette fiche polarisée avec un prolongateur, une prise de courant on une autre sortie de courant, sauf si les lames peuvent être insérées à fond sans en laisser aucune partie à découvert.
Pour deconnecter completement l’appareil du reseau d’alimentation. deconnecter le cordon d’alimentation de la prise murale.
La prise du reseau d’alimentation doit demeurer aisement accessible.

WARNING

To prevent fire or shock hazard, do not expose the unit to rain or moisture.

*WARNING FOR YOUR PROTECTION PLEASE READ THE FOLLOWING-WATER AND MOISTURE: Unit should not be used near water(e.g. near a bathtub, washbowl, kitchen sink, laundry tub, in a wet basement, or near a swimming pool, etc). Care should be taken so than objects do not fall and liquids are not spilled into the enclosure through openings.
*Do not install this equipment in a confined space such as a book case or similar unit.
*Warning : To reduce the risk of fire or electric shock, do not expose this apparatus to rain or moisture and objects filled with liquids, such as vases, should not be placed on this apparatus.
*This apparatus shall be connected to a mains socket outlet with a protective earthing connection.
*To completely disconnect this apparatus from the AC mains, disconnect the power supply cord plug from the AC receptacle.
*The mains plug of the power supply cord shall remain readily accessible.

CAUTION
*These servicing instructions are for use by qualified service personnel only. To reduce the risk of electric shock, do not perform any servicing other than that contained in the operating instructions unless you are qualified to do so.

NOTE
*This equipment has been tested and found to comply with the limits for a Class A digital device, pursuant to Part 15 of the FCC Rules. These limits are designed to provide reasonable protection against harmful interference when the equipment is operated in a commercial environment. This equipment generates, uses, and can radiate radio frequency energy and, if not installed and used in accordance with the instruction manual, may cause harmful interference to radio communications. Operation of this equipment in a residential area is likely to cause harmful interference in which case the user will be required to correct the interference at his own expense.

Contents

Unpacking 2

Installation
- Environment 2
- Important Safety Instructions 2

Features 3

Equipment Set-up and Check List 4

Front Panel 7

Rear Panel 8

Operation Flow Chart 12

Applications 14

Block Diagram 15

Specifications 16

Service
- Procedures 17
- Schematic 17
- Parts List 17

Variations and Options 17

Warranty 17

Unpacking

Although your TP-6231A is neither complicated nor difficult to operate, we recommend you take a few minutes to read this brief manual and familiarize yourself with the important information regarding product features, setup and operation.

As with most electronic devices, we strongly recommend you retain the original packaging. In the unlikely event the product must be returned for servicing, the original packaging (or reasonable equivalent) is required.

Installation

Environment
Never place this product in an environment which could alter its performance or reduce its service life. Such environments usually include high levels of heat, dust, moisture, and vibration.

IMPORTANT SAFETY INSTRUCTIONS

1. Read these instructions.
2. Keep these instructions.
3. Heed all warnings.
4. Follow all instructions.
5. Do not use this apparatus near water.
6. Clean only with dry cloth.
7. Do not block any ventilation openings. Install in accordance with the manufacturer's instructions.
8. Do not install near any heat sources such as radiators, heat registers, stoves, or other apparatus (including amplifiers) that produce heat.
9. Do not defeat the safety purpose of the polarized or grounding-type plug. A polarized plug has two blades with one wider than the other. A grounding type plug has two blades and a third grounding prong. The wide blade or the third prong are provided for your safety. If the provided plug does not fit into your outlet, consult an electrician for replacement of the obsolete outlet.
10. Protect the power cord from being walked on or pinched particularly at plugs, convenience receptacles, and the point where they exit from the apparatus.
11. Only use attachments/accessories specified by the manufacturer.
12. Use only with the cart, stand, tripod, bracket, or table specified by the manufacturer, or sold with the apparatus. When a cart is used, use caution when moving the cart/apparatus combination to avoid injury from tip-over.
13. Unplug this apparatus during lightning storms or when unused for long periods of time.
14. Refer all servicing to qualified service personnel. Servicing is required when the apparatus has been damaged in any way, such as power-supply cord or plug is damaged, liquid has been spilled or objects have fallen into the apparatus, the apparatus has been exposed to rain or moisture, does not operate normally, or has been dropped.



Features

- TELEPHONE PAGING
When connected to a regular telephone line (trunk) or via telephone switching station and a regular telephone this device can perform paging or broadcasting by using normal telephone, cell phone and public telephone.

- SELECT 2 OR 4 WIRE CONNECTION TYPE
2 wire: same method as general telephone
4 wire: Exchange interface type (2W E&M)

- OFF HOOK SIGNAL DETECT (CALL END)

- AUTO RESPONSE SERVICE (ARS)
ARS function is available with voice prompts and broadcasting services for user convenience. Message can directly be recorded by the user.

- SET PASSWORD
User password can be set.

- BROADCAST MODE SELECTION
Depending on user requirement, broadcasting mode can be selected.

- VOICE RECORD FUNCTION
Broadcasting messages can be recorded by the user.
Up to 20 seconds can be recorded.

Contents and Accessories

1. Power Cord x 1
2. Lan Cable x 1
3. Telephone Cable x 1
4. 24p Cable x 1
5. Operation Manual x 1

Equipment Set-up and Check List

1. Make sure system is turned off before configuring the set-up.
2. PD-6359 REMOTE CONTROL
   If remote control of PD-6359 is required, connect the power remote terminal of the TP-6231A (Terminal 5 on rear diagram of TP-6231A) to the remote terminal of PD-6359.
3. Telephone line connection (2 configurations).
   - 2 WIRE TELEPHONE INTERFACE
     Connect a standard telephone (RJ11) line wire to the TP-6231A(Terminal 13 on rear diagram of TP-6231A)
   - 4 WIRE (2W E&M)
     Refer to figure below for connector pin assignment. Used if you want to install a 2W E&M where private exchange is installed.

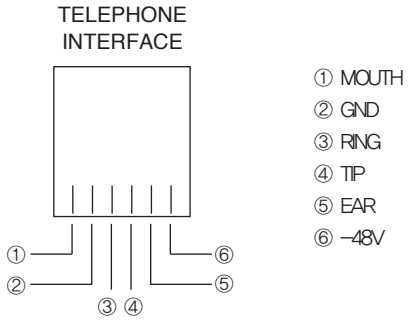

4. Broadcast Management Dial CODE
   Telephone broadcasting Dial Codes. (Based on dial buttons)

TYPE	CODE	REMARK
Broadcasting	*77#	ALL Broadcasting
Group Zone Broadcasting	*70#	*70# : 01~08 Local ALL Broadcasting
	*71#	*71# : 09~16 Local ALL Broadcasting
	*72#	*72# : 17~24 Local ALL Broadcasting
	*73#	*73# : 25~32 Local ALL Broadcasting
	*74#	*74# : 33~40 Local ALL Broadcasting
	*75#	*75# : 41~48 Local ALL Broadcasting
Normal Broadcasting	*??#	*??# : Select one from 01 to 48
Additional Functions	*#*#	*#*# : Recording function
	*88#	*88# : Switch to user mode
	*99#	*99# : Release user mode

※Note: When the paging broadcasting must be finish an asterisk (*), please exit by pressing the button. An asterisk (*) If you do not press the broadcast button and you can not finish properly. In this case, the power switch OFF then ON if it is restored.

5. SERIAL CONTROL and COMMANDS)

Serial Communication type: 1stop bit, non-parity, 8bits data, 9600 bps.

CONTROL COMMANDS (If serial communication terminal is used)

CHANNEL	CHANNEL 1	REMARK
1. START CODE	54Hex	
2. SET	60Hex + SET Number (Top 4BITS: MSB)	SET number equal to the area code (01 - FFH)
	70Hex + SET Number (Sub 4BITS: LSB)	
3. Command types	50Hex + Type of Number	50Hex=ALL, 51Hex=GROUP, 52H=EACH
4. Operation commands	23Hex : ON, 26Hex : OFF	23Hex : When you choosing broadcast local
		26Hex : HOOK-OFF
5. CHANNEL Number	30 - 3FHex	Select CHANNEL 1-16
6. SPACE	FFHex	END CODE

TP-6231A enables each commends.

6. Address Setting

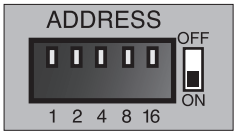

1) ECS-6216P / RME-6108

If connected with ECS-6216P or RME-6108, set address number for proper connection conditions.

2) When connecting to ECS-6216P directly (Can also be used with RM-6024)

- If Connected to RM1 terminal of ECS-6216P set address number of TP- 6231 to 1.
- If Connected to RM2 terminal of ECS-6216P set address number of TP- 6231 to 9.



3) When connecting to ECS-6216P through RME-6108 (Can also be used with RM-6024)
- If TP-6231A is connected to RME-6108 connected with RM1 terminal, address number should be selected among 1~8.
- If TP-6231A is connected to RME-6108 connected with RM2 terminal, address number should be selected among 9~16.

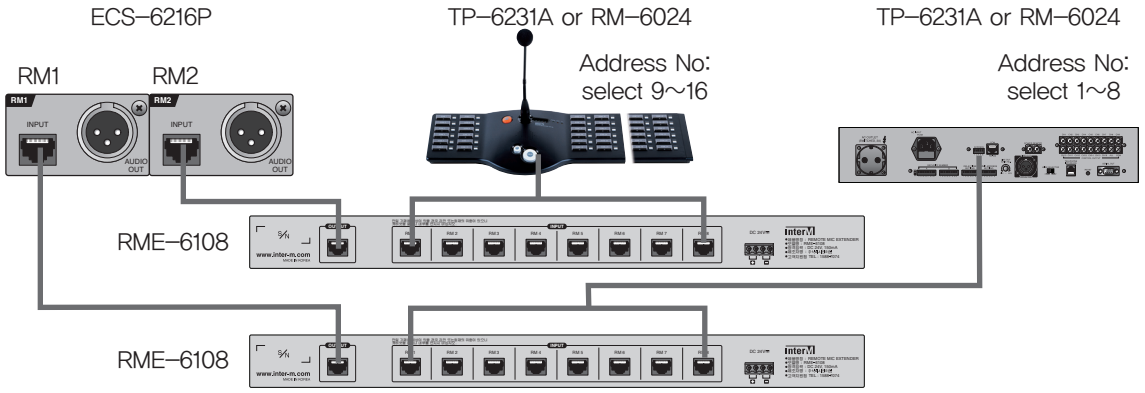

4) How to set up equipment address number for TP-6231A.
Setting should be as table below:

Pin No.		1	2	3	4	5
Data		1	2	4	8	16
Address	1	ON				
	2		ON			
	3	ON	ON			
	4			ON		
	5	ON		ON		
	⋮	⋮	⋮	⋮	⋮	⋮
	15	ON	ON	ON	ON	
	16					ON
	⋮	⋮	⋮	⋮	⋮	⋮

*Data value when Dip Switch is in ON position
(Ex: when Dip Switch number 1 and 3 are ON, Data value 1 and 4 is added, so equipment address number will be 5.)

7. Setup the SECURUTY NUMBER, DELAY TIME switch of rear panel.
If setup is wrong, OPERATION LED on the front panel will be ON.

8. Adjust the line output level by using volume on the rear panel.

Front Panel

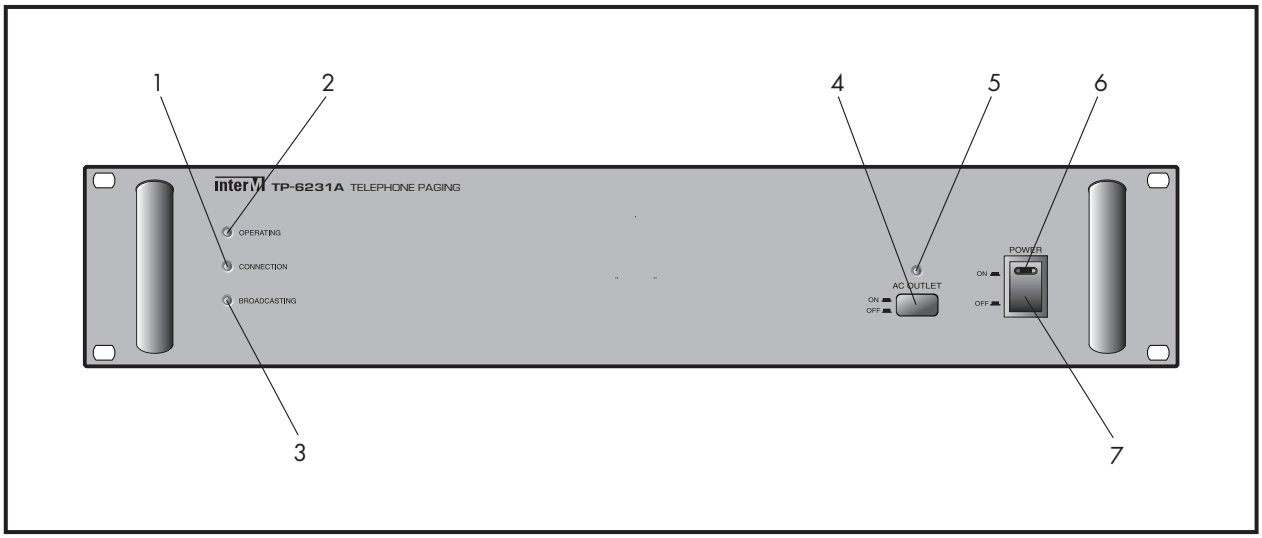

1. CONNECTION LED
LED illuminates when the phone is connected.

2. OPERATING LED
This LED displays the operating status of equipment. When the state is normal, the LED flashes, and when Off indicates fault.

3. BROADCASTING LED
LED will be ON if broadcasting is connected or being broadcasted.

4. AC OUTLET SWITCH
Turns rear AC OUTLET on or off manually.

5. AC OUTLET LED
It will be on when AC OUTLET switch is pushed ON.

6. POWER LED
Indicated power on/off status.

7. POWER SWITCH
Turns TP-6231A ON/OFF.

Rear Panel

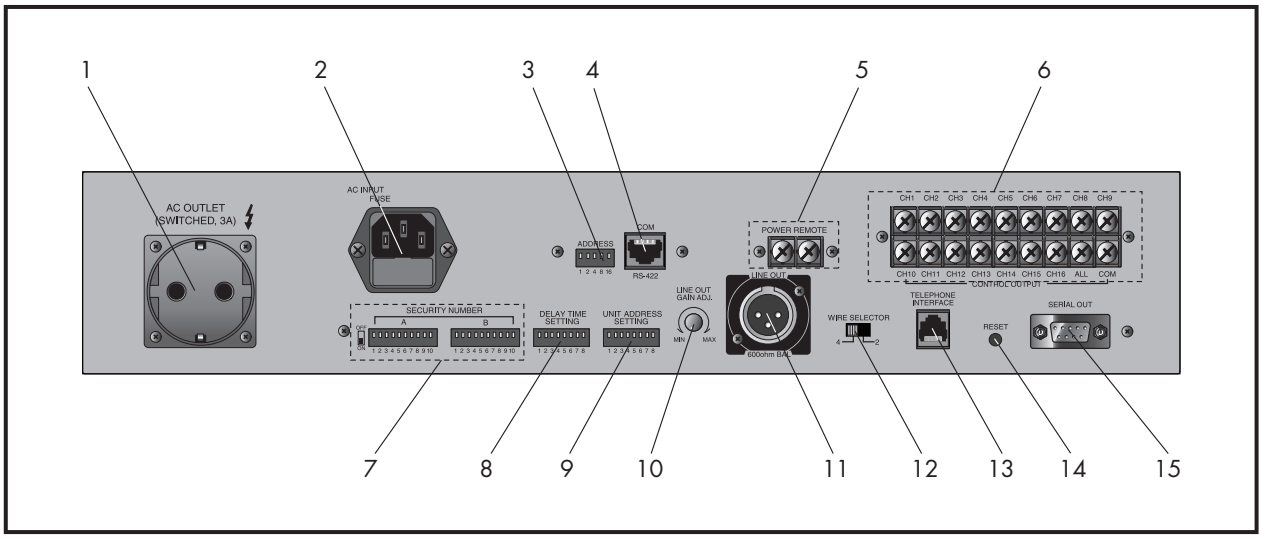

1. AC OUTLET (SWITCHED)

AC power output terminal, max 3A can be connected.
Outlet is on if broadcasting or if manually activated by front AC OUTLET.

2. AC INLET

AC power input connecting terminal.

3. ADDRESS Switch

Sets the equipment address number.
Should be set only when it is connected to ECS-6216P or RME-6108.
Refer to page 5 of Equipment Setting for more detailed information

4. DATA & AUDIO Terminal (RJ-45)

Connects to ECS-6216P or RME-6108 and supplies data and audio signal.

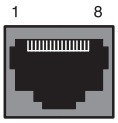

PIN NO.	Functions
1	RS-422 Data - TX+
2	RS-422 Data - TX-
3	RS-422 Data - RX-
4	Live Data
5	GND
6	RS-422 Data - RX+
7	Balanced Audio Output - HOT
8	Balanced Audio Output - COLD

5. POWER REMOTE TERMINAL

Connects to PD-6359 and once connected, the output contacts will be broadcast.

6. CONTROL OUTPUT TERMINAL

When broadcasting starts, a user-selected zone outputs contact closure to terminal of the channel. Read instructions on page 4, 4. Broadcast Management Dial CODE.

※ Connect terminal of the zone you selected and COM terminal to the contact closure device.
i.e. Select Zone 1 and contact closure is output from CH1 once broadcasting starts.

7. SECURITY NUMBER SETTING SWITCH

- A TYPE : The tens input value

1	2	3	4	5	6	7	8	9	10	S/W SETTING
1	2	3	4	5	6	7	8	9	0	Input Value

- B TYPE : The first number input value

1	2	3	4	5	6	7	8	9	10	S/W SETTING
1	2	3	4	5	6	7	8	9	0	Input Value

8. DELAY TIME SETTING SWITCH

1	2	3	4	5	6	7	8
TEL OFF Signal timing adjustment				Determine the number of RING		Device operation method installation	

- TEL OFF Signal Time Adjustment (1~4)

A call may not end properly if not ended by pressing * button of telephone. Set the switch in accordance with the use.

Mode	Switches				Ts (ON TIME, OFF TIME)	T
	1	2	3	4		
0	OFF	OFF	OFF	OFF	300 ms ± 50 ms	600 ms ± 100 ms
1	ON	OFF	OFF	OFF	350 ms ± 50 ms	700 ms ± 100 ms
2	OFF	ON	OFF	OFF	400 ms ± 20 ms	800 ms ± 100 ms
3	OFF	OFF	ON	OFF	500 ms ± 30 ms	1000 ms ± 60 ms
4	OFF	OFF	OFF	ON	500 ms ± 50 ms	1000 ms ± 100 ms

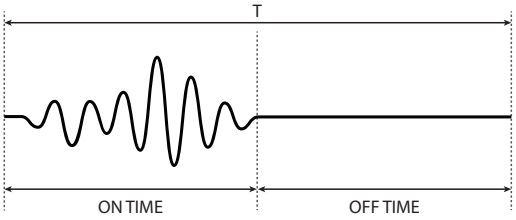

The table on the above shows call End Signal the device can detect as the switch is set. Once the signal is detected, the call is rightly ended.

- RING COUNT.
  Determines the number of RINGs before the TP-6231A will answer when receiving a call.

5	6	RING COUNT
OFF	OFF	1
OFF	ON	2
ON	OFF	3
ON	ON	4

- Operational Method Setup
  Select from 2 possible operation modes as per table below:

7	8	Operational Method
OFF	OFF	Normal mode
ON	OFF	SECURITY No. Skip mode
OFF	ON	DIRECT ALL ZONE Broadcasting mode
ON	ON	RESERVED

※DIP switches during operation, must not operated, press the RESET switch.

9. UNIT ADDRESS SETUP SWITCH

It is the switch which allocates the equipment number. (Input in hex. Value)

	6*				7*			
DIP Switch	1	2	3	4	5	6	7	8
Data	8	4	2	1	8	4	2	1

MSB LSB

Example	OFF	OFF	ON	ON	OFF	ON	OFF	ON
Result	63				75			

This switch is used when sending the equipment address number or status information via the RS232 communication port terminal (Connector 15 on rear panel).

10. LINE OUT GAIN VOLUME

Adjusts volume output level.

11. LINE OUTPUT TERMINAL

600Ω BALANCED OUTPUT.

12. 4 & 2 WIRE SELECTOR SWITCH

SELECTOR SLIDE switch selects between 4 & 2 WIRE operation mode.

13. TELEPHONE INTERFACE

RJ12 Connector. This terminal connects to the Telephone Line. Used for both 4 wire and 2 wire mode.
Pin 1 Mouth, Pin 2 Ground, Pin 3 Ring, Pin 4 Tip, Pin 5 Ear, Pin 6 -48V

14. RESET SWITCH

Status will be restored if normal operation.

15. SERIAL COMMUNICATION TERMINAL

RS-232C SERIAL communication terminal (RX/TX).
Figure below shows pin configuration and proper wiring.

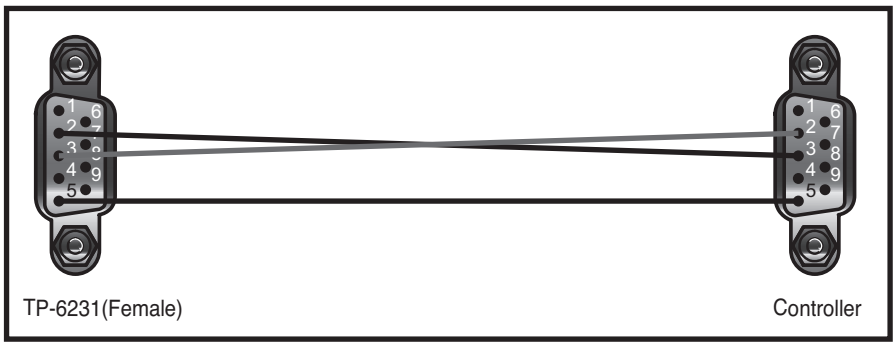

-RS-232C

Pin No.	Definition
1	NC
2	RxD
3	TxD
4	NC
5	GND
6	NC
7	NC
8	NC
9	NC

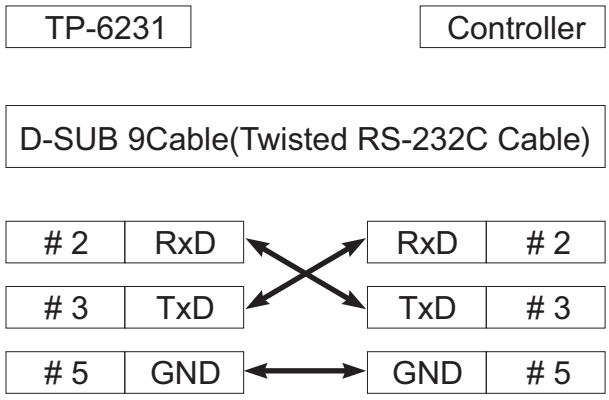

Operation Flow Chart

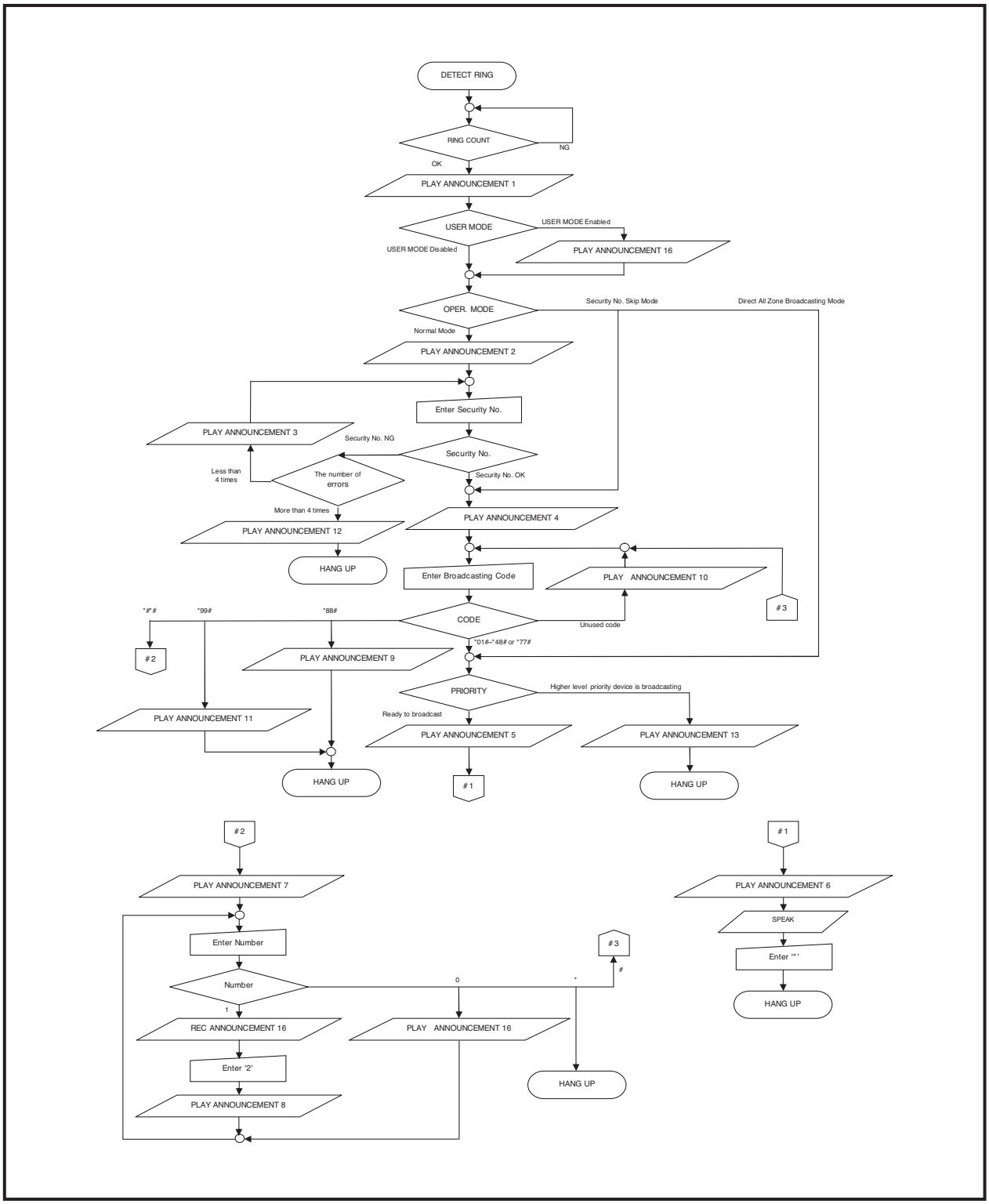

※ ANNOUNCEMENT INFORMATION

NUMBER	ENGLISH
1	Now you are connected to telephone paging.
2	Please enter the password.
3	You entered wrong password, please re-enter the password.
4	Please press star and extension number then press pound or press 77 and pound for all paging. If you want to start over, please press pound.
5	Now you are connected, please speak after chime then press star to finish star.
6	FOUR-TONE CHIME
7	You can record your greeting message. Please press number 1 for recording, number 2 for stop, and number 0 for verify. If you want to go back to the previous menu, please press pound.
8	Now recording is completed. If you want to verify, please press number 0. If you want to go back to previous menu, please press pound.
9	User mode has been set.
10	Wrong extension number. Please re-enter the extension number.
11	User mode has been cancelled.
12	You exceeded limit of trying password, Please use it next time.
13	Other device is in use . Please use it next time.
14	Limited time is exceeded. Please use it next time.
15	(BEEP)
16	(Recorded sound by the user)

Applications

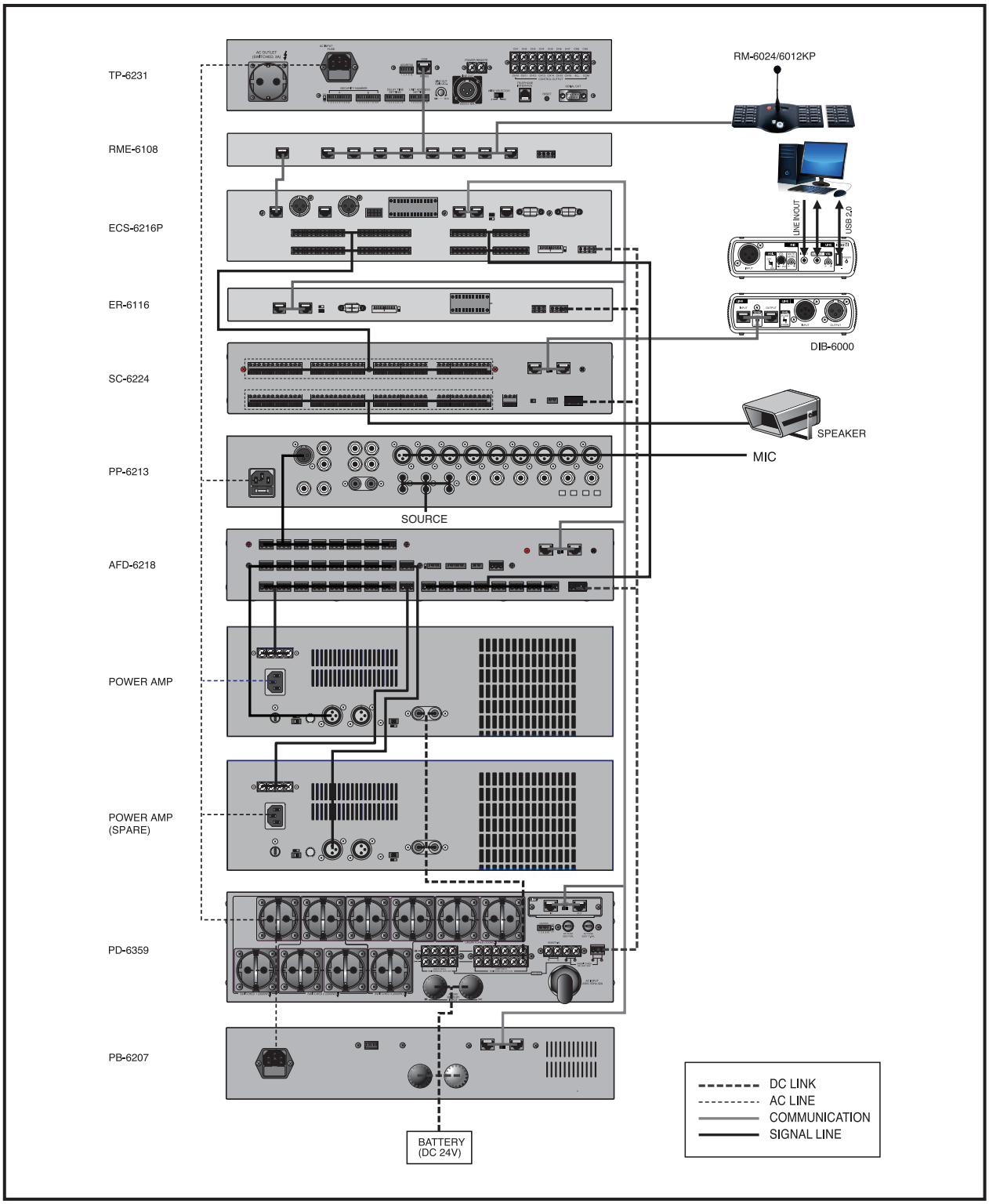

Block Diagram

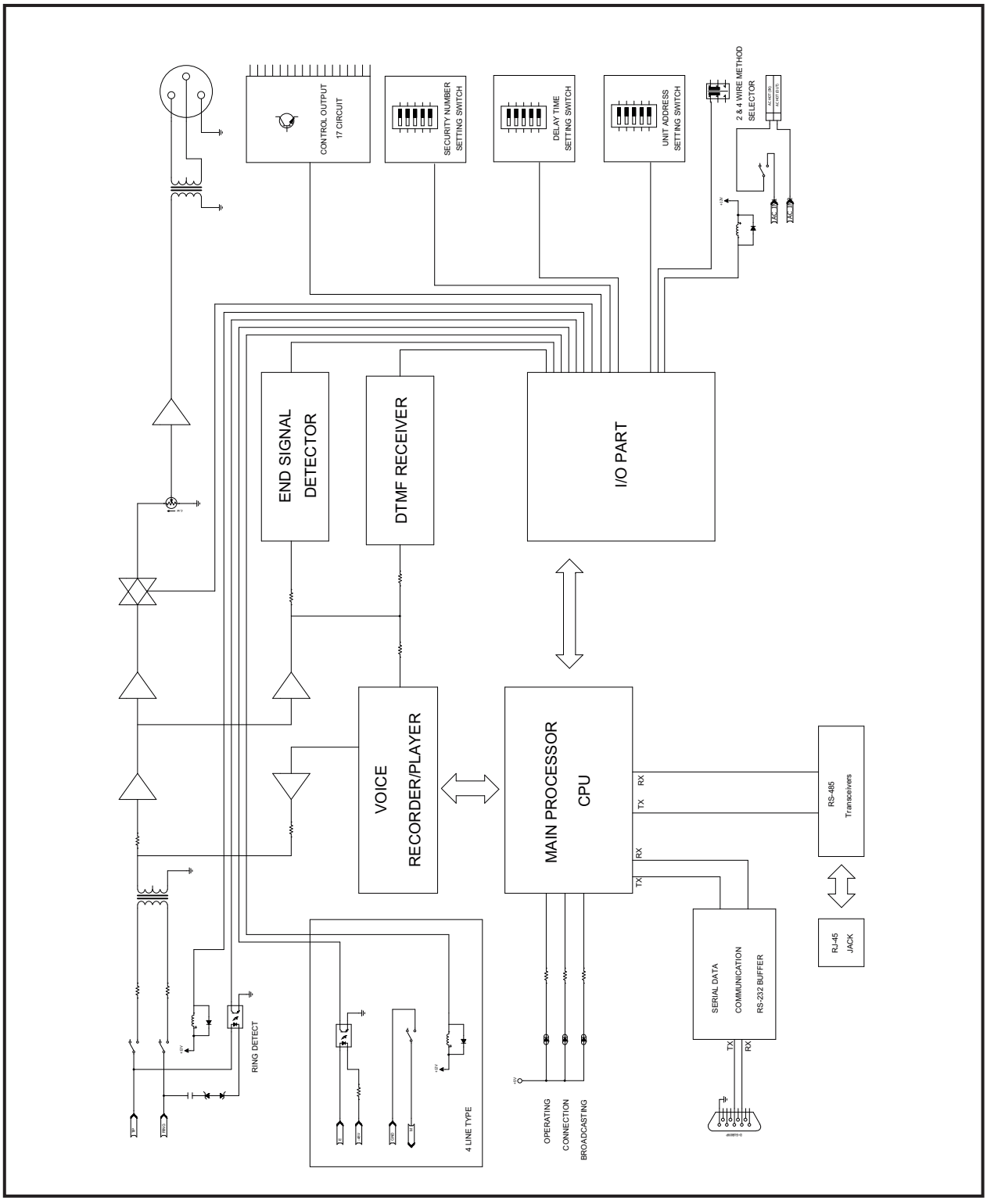

Specifications

	TP-6231A
Frequency Response (0dB , +1/-3dB Decrease)	80Hz - 8kHz
THD (0dB, 1kHz)	Less than 1%
Signal to Noise ratio (S/N)	Better than 65dB
AC OUTLET	Switched : AC 230V/50Hz, 3A
Remote Power control Circuit number	1 Circuit
Speaker control circuit number	48 Circuit
Output control	All, Zone(6group), Individual
Indicate Lamp	STATUS LED of Four
LINE OUT	BALANCED 600Ω, –62dB~12dB
Communication Protocol	RS-422(Maximum 1km/3,280 feet)
Operation Temperature	-10°C ~ +40°C
Power Source	AC 230V, 50Hz
Power Consumption	3A (AC OUTLET + Equipment power consumption)
Weight (SET)	4kg/8.8lb
Dimensions (SET)	482(W)x88(H)x280(D)mm/19(W)x3.5(H)x11(D)in

※NOTE: In case of not matched operation temperature, please use the thermostat rack for another installation place.

※Design and specification are subject to be changed for the improvement of product quality without pre notice.

※ DIMENSIONS

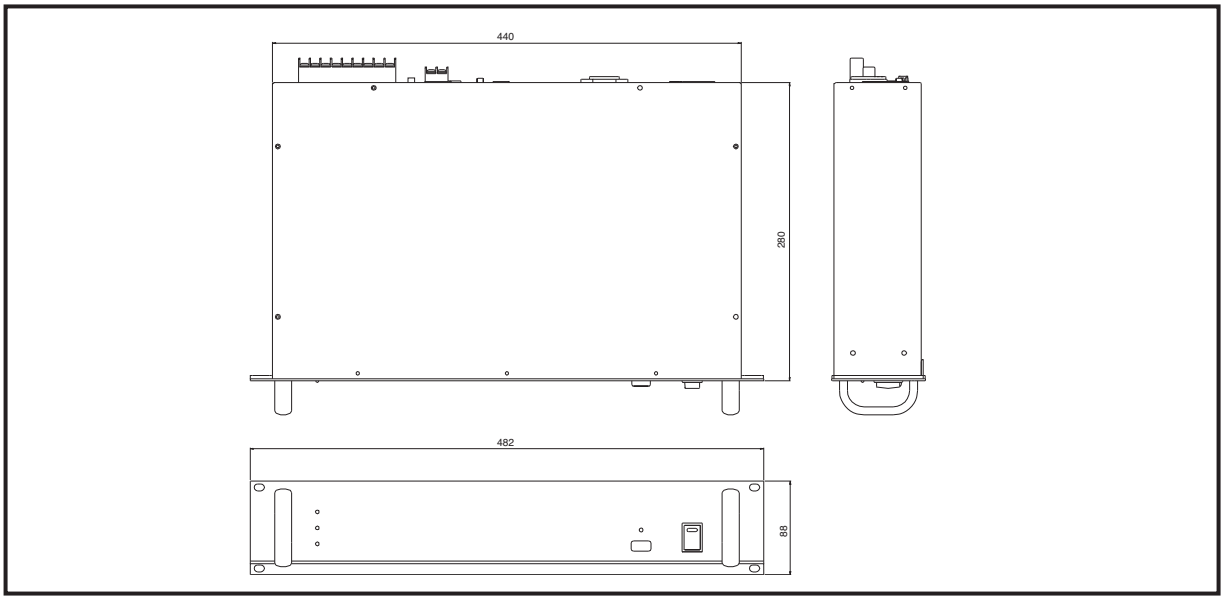

Service

Procedures
Take steps to insure the problem is not related to operator error or other products within the system. Information provided in the troubleshooting portion of this manual may help with this process. Once it is certain that the problem is related to the product contact your warranty provider as described in the warranty section of this manual.

Schematic
A Schematic is available by contacting your warranty provider.

Parts List
A Parts List is available by contacting your warranty provider.

Variations and Options

Variations
Products supplied through legitimate sources are compatible with local AC power requirements.

Options
No optional items are available for this product.

Warranty

Warranty terms and conditions vary by country and may not be the same for all products. Terms and conditions of warranty for a given product may be determined first by locating the appropriate country which the product was purchased in, then by locating the product type.

To obtain specific warranty information and available service locations contact Inter-M directly or the authorized Inter-M Distributor for your specific country or region.

Inter-M, Ltd. (Korea) began operations in 1983.

Since then, Inter-M has grown to become one of the largest manufacturers
of professional audio and commercial sound electronics equipment in the world.

Inter-M has gained worldwide recognition for its own branded products,
as well as private label manufacturing of electronics sold under other names (OEM).

The company is no longer just a Korean company, but rather a global company
that is truly international in scope, with factories and offices in Korea and China,
and sales and marketing operations located in Japan, Europe, and the U.S.A.

With more than 850 employees around the globe,
Inter-M is well-poised for further growth and expansion.

Inter-M Americas, INC.
5666 CORPORATE AVE. CYPRESS, CA 90630
TEL : +1-714-828-2200, FAX : +1-714-828-2210
Home Page : http://www.inter-m.net, E-mail : info@inter-m.net

Inter-M Corporation
SEOUL OFFICE : 719, DOBONG-RO, DOBONG-GU, SEOUL, KOREA
TEL : +82-2-2289-8140~8, FAX : +82-2-2289-8149
Home Page : http://www.inter-m.com, E-mail : overseas@inter-m.com

MADE IN KOREA
June 2021 154220