Operation Manual

Stereo Tuner

TU-6200

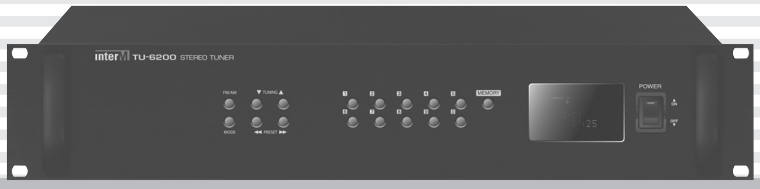

*Rack mount products in the Western Hemisphere (North America, South America, and the Caribbean) do not have handles installed due to customer preference.

Welcome

A personal welcome to you from the management and employees of Inter-M

All of the co-workers here at Inter-M are dedicated to providing excellent products with inherently good value, and we are delighted you have purchased one of our products.

We sincerely trust this product will provide years of satisfactory service, but if anything is not to your complete satisfaction, we will endeavor to make things right.

Welcome to Inter-M, and thank you for becoming part of our worldwide extended family!





This symbol is intended to alert the user to the presence of uninsulated “dangerous voltage” within the product’s enclosure that may be of sufficient magnitude to constitute a risk of electric shock to persons.



This symbol is intended to alert the user to the presence of important operation and maintenance (servicing) instructions in the literature accompanying the appliance.

Caution: To prevent electric shock do not use this (polarized) plug with an extension cord, receptacle or other outlet unless the blades can be fully inserted to prevent blade exposure.

Attentions: Pour prévenir les chocs électriques ne pas utiliser cette fiche polarisée avec un prolongateur, une prise de courant on une autre sortie de courant, sauf si les lames peuvent être insérées à fond sans en laisser aucune partie à découvert.
Pour deconnecter completement l’appareil du reseau d’alimentation. deconnecter le cordon d’alimentation de la prise murale.
La prise du reseau d’alimentation doit demeurer aisement accessible.

WARNING

To prevent fire or shock hazard, do not expose the unit to rain or moisture.

*WARNING FOR YOUR PROTECTION PLEASE READ THE FOLLOWING-WATER AND MOISTURE: Unit should not be used near water(e.g. near a bathtub, washbowl, kitchen sink, laundry tub, in a wet basement, or near a swimming pool, etc). Care should be taken so than objects do not fall and liquids are not spilled into the enclosure through openings.
*Do not install this equipment in a confined space such as a book case or similar unit.
*Warning : To reduce the risk of fire or electric shock, do not expose this apparatus to rain or moisture and objects filled with liquids, such as vases, should not be placed on this apparatus.
*This apparatus shall be connected to a mains socket outlet with a protective earthing connection.
*To completely disconnect this apparatus from the AC mains, disconnect the power supply cord plug from the AC receptacle.
*The mains plug of the power supply cord shall remain readily accessible.

CAUTION
*These servicing instructions are for use by qualified service personnel only. To reduce the risk of electric shock, do not perform any servicing other than that contained in the operating instructions unless you are qualified to do so.

NOTE
*This equipment has been tested and found to comply with the limits for a Class A digital device, pursuant to Part 15 of the FCC Rules. These limits are designed to provide reasonable protection against harmful interference when the equipment is operated in a commercial environment. This equipment generates, uses, and can radiate radio frequency energy and, if not installed and used in accordance with the instruction manual, may cause harmful interference to radio communications. Operation of this equipment in a residential area is likely to cause harmful interference in which case the user will be required to correct the interference at his own expense.

Contents

Unpacking 2

Installation
Environment 2
Important Safety Instructions 2

Features 3

Additional Explanations 3

Front Panel 4

Rear Panel 5

Operation Method 6

Connecting Antenna 7

Block Diagram 8

Specifications 9

Service 11

Variations and Options 11

Warranty 11

Unpacking

Although your TU-6200 is neither complicated nor difficult to operate, we recommend you take a few minutes to read this brief manual and familiarize yourself with the important information regarding product features, setup and operation.

As with most electronic devices, we strongly recommend you to retain the original packaging. In the unlikely event the product must be returned for servicing, the original packaging (or reasonable equivalent) is required.

Installation

Environment

Never place this product in an environment which could alter its performance or reduce its service life. Such environments usually include high levels of heat, dust, moisture, and vibration.

IMPORTANT SAFETY INSTRUCTIONS

1. Read these instructions.
2. Keep these instructions.
3. Heed all warnings.
4. Follow all instructions.
5. Do not use this apparatus near water.
6. Clean only with dry cloth.
7. Do not block any ventilation openings. Install in accordance with the manufacturer's instructions.
8. Do not install near any heat sources such as radiators, heat registers, stoves, or other apparatus (including amplifiers) that produce heat.
9. Do not defeat the safety purpose of the polarized or grounding-type plug. A polarized plug has two blades with one wider than the other. A grounding type plug has two blades and a third grounding prong. The wide blade or the third prong are provided for your safety. If the provided plug does not fit into your outlet, consult an electrician for replacement of the obsolete outlet.
10. Protect the power cord from being walked on or pinched particularly at plugs, convenience receptacles, and the point where they exit from the apparatus.
11. Only use attachments/accessories specified by the manufacturer.
12. Use only with the cart, stand, tripod, bracket, or table specified by the manufacturer, or sold with the apparatus. When a cart is used, use caution when moving the cart/apparatus combination to avoid injury from tip-over.
13. Unplug this apparatus during lightning storms or when unused for long periods of time.
14. Refer all servicing to qualified service personnel. Servicing is required when the apparatus has been damaged in any way, such as power-supply cord or plug is damaged, liquid has been spilled or objects have fallen into the apparatus, the apparatus has been exposed to rain or moisture, does not operate normally, or has been dropped.



Features

- Memory of 40 FM/AM frequencies
40 broadcasting frequencies can be memorized.

- Auto Scan
Broadcast station can be selected automatically with automatic seek function.

- AMX, CRESTRON INTERFACE
It supports the control port to integrate with the remote control device such as AMX and CRESTRON control systems for the user assignments.

Additional Explanations

- AMX, CRESTRON INTERFACE
It is the terminal which is connected with remote controllers like AMX and CRESTRON control systems.
PINOUT and controllable operations are as follows.
(Max. cable length is about 15M)

1. RS-232 PINOUT Specification

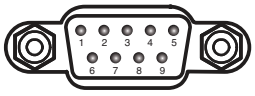

Pin	1	2	3	4	5	6~9
Purpose	Not Used	Receiver	Transmit	Not Used	Ground	Not Used

2. Controllable functions: POWER ON/OFF, BAND, TUNING DOWN/UP, PRESET DOWN/UP, 10KEY

3. Downloading control protocols
You can download it via www.inter-m.com.

Front Panel

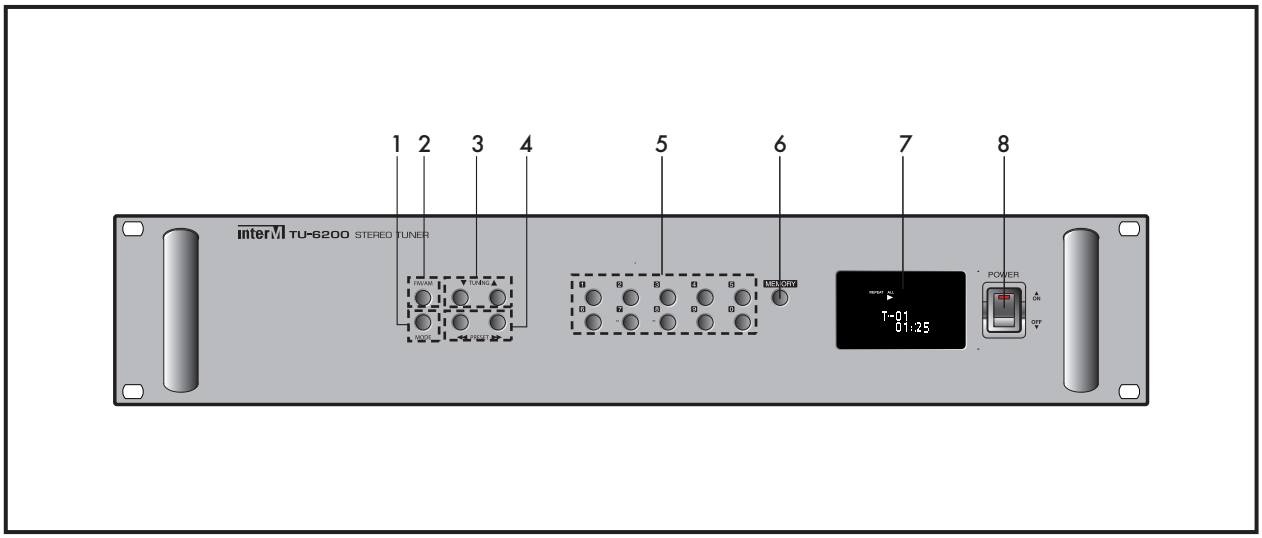

1. MODE BUTTON
It is used when selecting FM broadcast mode (MONO/STEREO).

2. AM/FM BUTTON
It is used when selecting AM and FM broadcasting.

3. ▼/▲ (FREQUENCY DOWN/UP) BUTTON
It is used when changing the frequency.

4. ◄◄/►► (PRESET DOWN/UP) BUTTON
It is used when selecting the memorized broadcast frequency.

5. 0~9 NUMBER BUTTONS
It is used when memorizes the broadcast frequency or selects the memorized frequency.

6. MEMORY BUTTON
It is used when memorizing the broadcast frequency.

7. DISPLAY WINDOW
It is the window displaying the system information.

8. POWER BUTTON
It is the button for the power ON/OFF.

Rear Panel

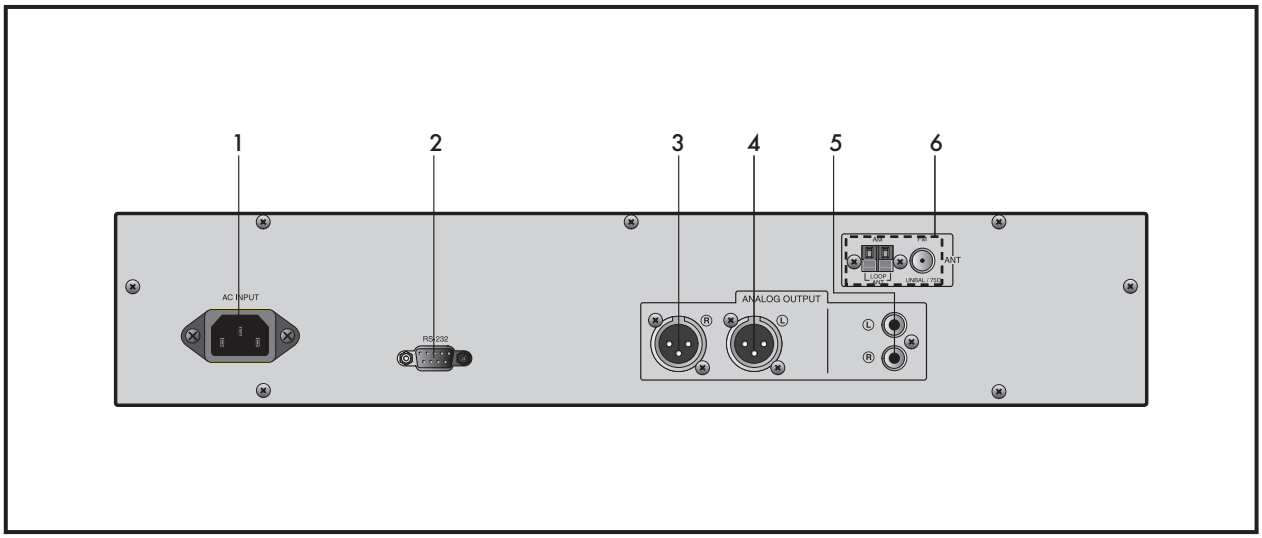

1. AC INPUT TERMINAL
It is the terminal witch connects the power cord.

2. RS-232 INTERFACE
It is the terminal which connects the remote controller such as AMX and CRESTRON control systems.

3. R-CHANNEL XLR OUTPUT
It is R-channel balance audio output terminal.

4. L-CHANNEL XLR OUTPUT
It is L-channel balance audio output terminal.

5. RCA OUTPUT TERMINAL
It is L/R 2 channels unbalance audio output terminal.

6. ANTENNA TERMINAL
It is the terminal which connects FM/AM antenna.

Operation Method

1. SELECT BROADCAST FREQUENCY AUTOMATICALLY AND MANUALLY

1) Push the power switch on the front panel.
2) By using ▼/▲ (frequency DOWN/UP) button, select the frequency you desire.
   - Automatic Seeking: push the frequency down or up button for 2 seconds, it will stop at the receivable frequency.
   - Manual Seeking: push the frequency down or up button shortly to select the broadcast frequency.

2. MODE(MONO/STEREO) BUTTON

1) If noise is mixed in FM broadcast, push this button, then it will be converted to mono so that you can hear more clear broadcast sound.

3. HOW TO SAVE BROADCAST FREQUENCY AND LOAD IT

1) With ▼/▲ (Frequency DOWN/UP) button, select the frequency you desire.
2) Push MEMORY button, then MEMORY will be displayed on the window for 10 seconds.
3) With number button (0~9) to select the channel number to be saved.
4) Repeat number 1 to 3, then max 40 frequencies can be memorized.
5) Broadcast frequency saved in each channel can be selected with number button or ◄◄/►►(PRESET DOWN/UP) button.

4. TURN ON/OFF BUZZER SOUND

1) It is the function which turns on/off buzzer (Beep~) generated whenever pushing the button.
2) Push MEMORY and MODE buttons same time, then "SET MODE" will be displayed on the window.
3) Push ◄◄/►►(PRESET DOWN/UP) button to display the current status of BUZZER ON/OFF.
4) Select ON/OFF by using ▼/▲(Frequency DOWN/UP) button. (Default setting is ON)
5) Select either ON or OFF, then push MEMORY button to complete the setting.

5. AUTO MUTE

1) This function automatically mutes noise when "TUNED" is not displayed.
2) Push MEMORY and MODE simultaneously, then "SET MODE" is displayed.
3) Push ◄◄/►►(PRESET DONW/UP) button twice, then "AUTO MUTE ON/OFF" is displayed.
4) Choose ON or OFF using ▼/▲(Frequency DOWN/UP buttons.(Default: OFF)
5) After choosing ON or OFF, push MEMORY button to finish setting.

Connecting Antenna

1. FM ANTENNA

Due to its property, FM broadcast frequency will be weaker in valley, surroundings of building, reinforced building, etc. install the antenna by considering frequency strength or surrounding situations.

2. INSTALLATION OF FM ANTENNA

Connect to FM antenna terminal as shown in the below figure, and decide the installation position and direction to make reception good while listening the broadcast. Noise may occur in the downtown area and a section of a city, industrial complex where traffic is heavy and near power line even if FM exclusive antenna is used. Use coaxial cable of 75Ω.

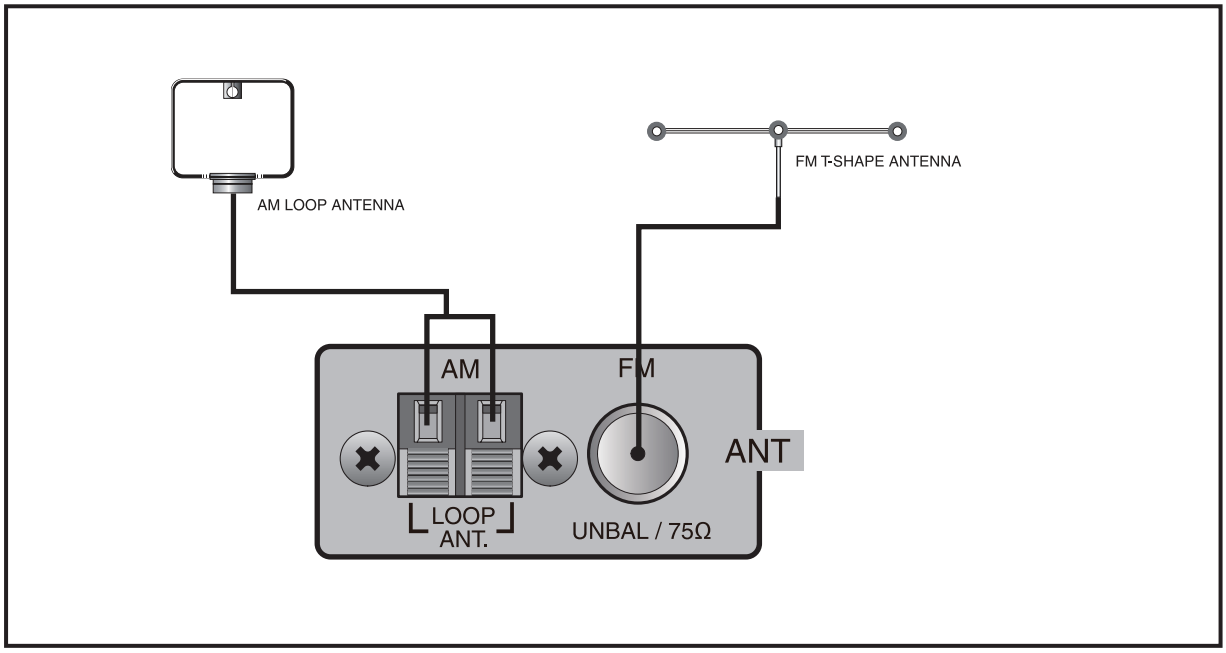

3. AM LOOP ANTENA

Connect to AM antenna as shown in the figure, then move the antenna and set to make reception good. If broadcast is not received well, connect AM FLEM antennal (Vinyl coated line) to the antenna terminal.

4. AM LEAD ANTENA

Make 6~8m of vinyl coated line of single phase, then fix one side to AM terminal and other side to higher location like wall, etc.

5. AM EXTERNAL ANTENNA

If broadcast is not received well even if lead antenna is installed in the room, install the vinyl coated line in the outside.

Block Diagram

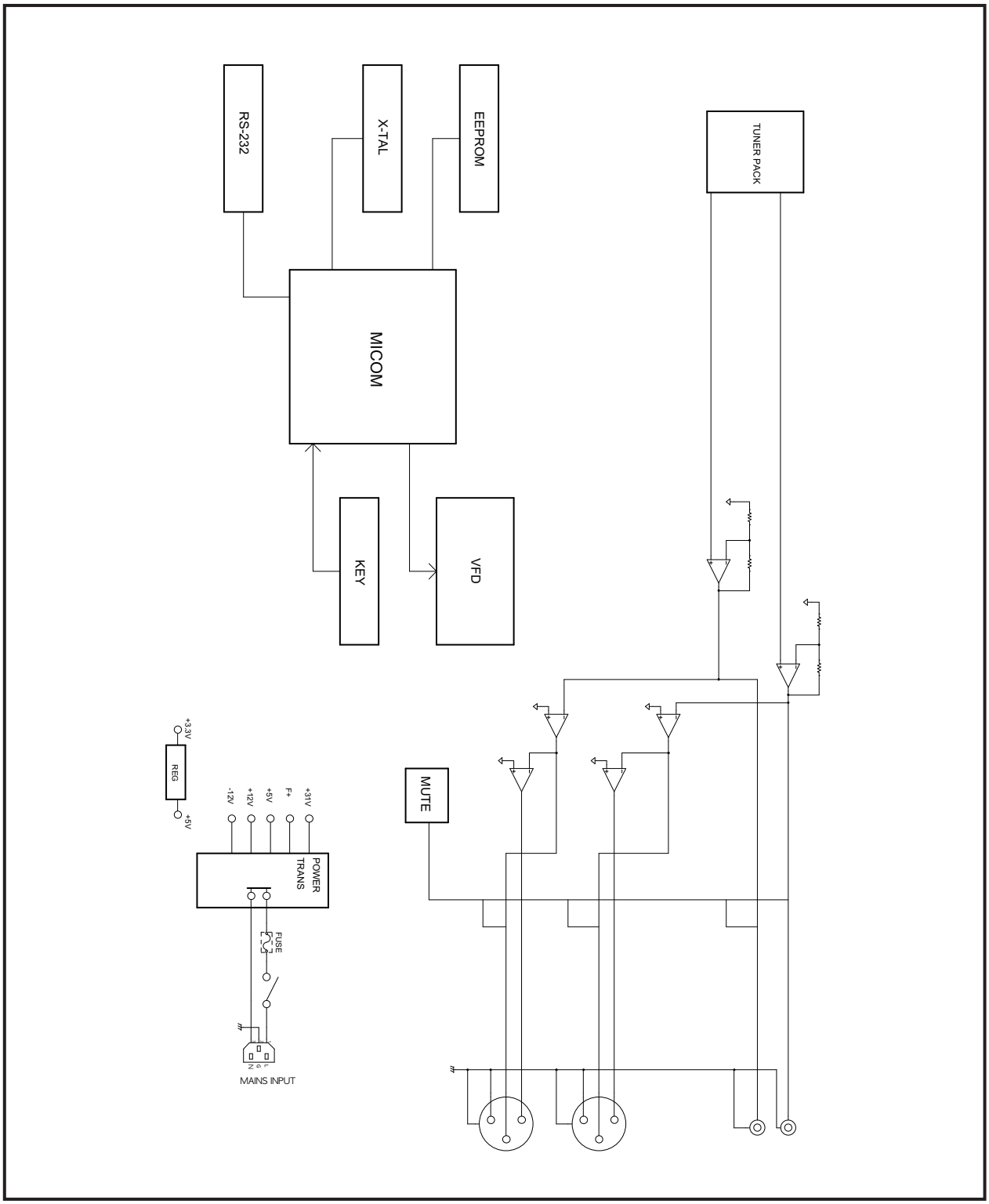

Specifications

	TU-6200
FM (75kHz MOD. 1kHz)	
Tuning range	87.5~108.0MHz
Sensitivity	6dB(Less than 10dB)
T.H.D. (Mono)	0.3% (Less than 1%)
S/N (mono)	60dB (Better than 50dB)
Output level (75kHz MOD.)	0dB±3 dB
AM (30% MOD 400Hz)	
Tuning range	Europe: 522~1629kHz, U.S.A: 520~1710kHz
Sensitivity	82dB(Less than 86dB)
S/N	35dB(Better than 30dB)
T.H.D.	1.5% (Less than 3%)
Output level	-10dB±3 dB
Operation Temperature	-10℃ ~ +40℃
Power source	100–120VAC or 220–240VAC; 50/60Hz (Supplied AC mains transformer depends on country requirements)
Power consumption	7W
Weight (SET)	4.2kg/9.3lb
Dimensions (SET)	482(W)×88(H)×280(D)mm/19(W)x3.5(H)x11(D)in

* Design and specification are subject to be changed for the improvement of product quality without pre notice.

※ DIMENSIONS

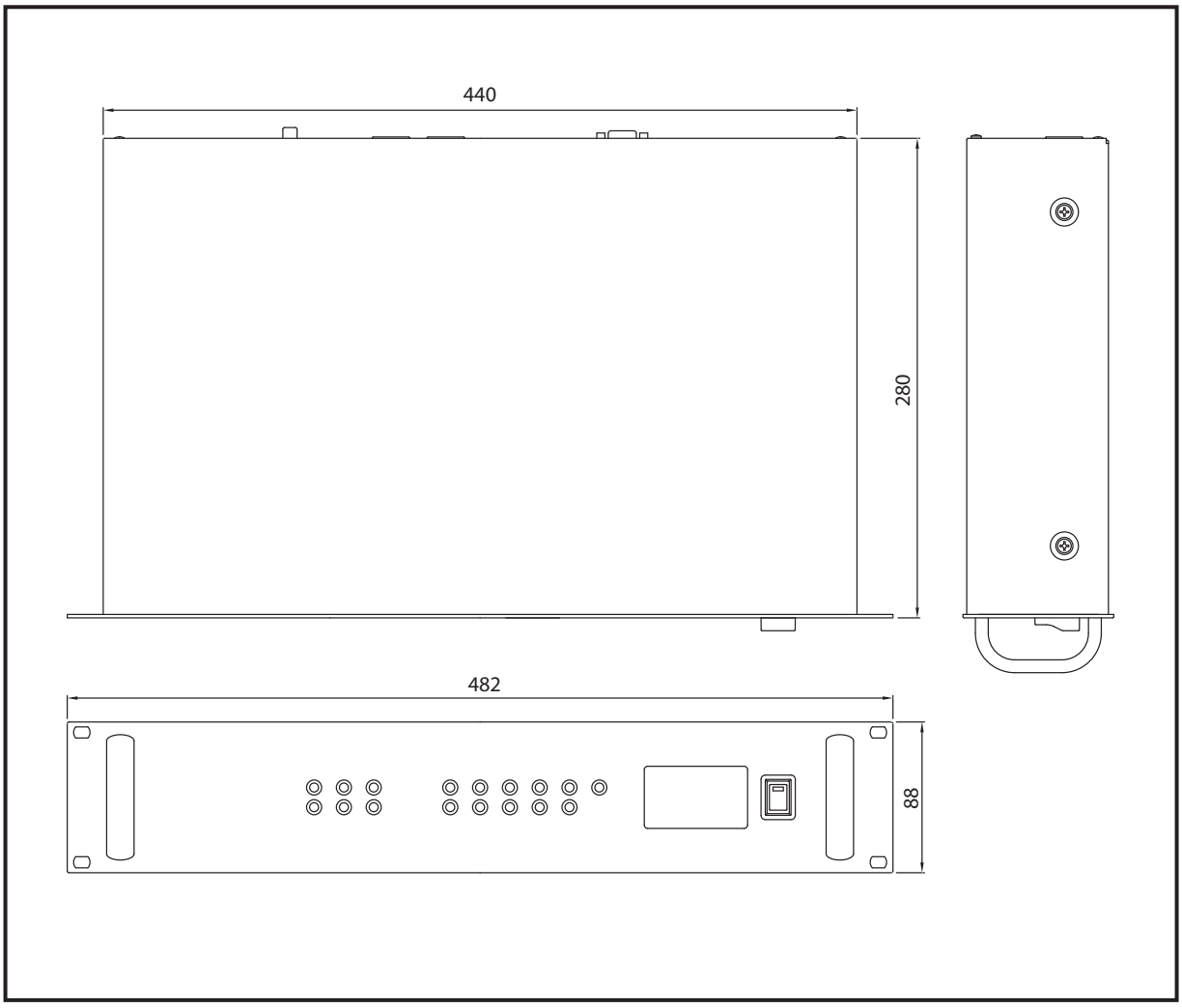

Service

Procedures
Take steps to insure the problem is not related to operator error or other products within the system. Information provided in the troubleshooting portion of this manual may help with this process. Once it is certain that the problem is related to the product contact your warranty provider as described in the warranty section of this manual.

Schematic
A Schematic is available by contacting your warranty provider.

Parts List
A Parts List is available by contacting your warranty provider.

Variations and Options

Variations
Variations of this product exist to reflect the variations in AC power requirements throughout the world. Product supplied through local sources are compatible with local AC power requirements.

Options
No optional items are available for this product.

Warranty

Warranty terms and conditions vary by country and may not be the same for all products. Terms and conditions of warranty for a given product may be determined first by locating the appropriate country which the product was purchased in, then by locating the product type.

To obtain specific warranty information and available service locations, contact Inter-M directly or the authorized Inter-M Distributor for your specific country or region.

NOTE

Inter-M, Ltd. (Korea) began operations in 1983.

Since then, Inter-M has grown to become one of the largest manufacturers
of professional audio and commercial sound electronics equipment in the world.

Inter-M has gained worldwide recognition for its own branded products,
as well as private label manufacturing of electronics sold under other names (OEM).

The company is no longer just a Korean company, but rather a global company
that is truly international in scope, with factories and offices in Korea and China,
and sales and marketing operations located in Japan, Europe, and the U.S.A.

With more than 850 employees around the globe,
Inter-M is well-poised for further growth and expansion.

Inter-M Americas, INC.
5666 CORPORATE AVE. CYPRESS, CA 90630
TEL : +1-714-828-2200, FAX : +1-714-828-2210
Home Page : http://www.inter-m.net, E-mail : info@inter-m.net

Inter-M Corporation
SEOUL OFFICE : 719, DOBONG-RO, DOBONG-GU, SEOUL, KOREA
TEL : +82-2-2289-8140~8, FAX : +82-2-2289-8149
Home Page : http://www.inter-m.com, E-mail : overseas@inter-m.com

MADE IN KOREA
June 2021 154540