MG21

CARDIOID CONDENSER GOOSENECK MICROPHONE



interM

MG21 CARDIOID CONDENSER GOOSENECK MICROPHONE

FEATURES

The MG21 gooseneck microphones meets the design requirements for speech reinforcement in conferences and podium PA applications. The black, non–glare surface can be discretely integrated into any installation. Its uniform controlled wide frequency response ranging from as low as 60Hz up to 17 kHz makes the MC21 ideal for live speech applications.

The cardioid polar pattern of the MG21 microphones ensures maximum volume due to a high gain before feedback with excellent intelligibility of speech. The high sensitivity, cardioid pattern, electret condenser cap–sule further isolate vocals from unwanted surrounding sound.

The MG21 Gooseneck microphone can be used in many application including speaker's desks or altars, conference systems, and sound systems or as a stationary paging microphone Applications include schools, auditoriums, churches, corporate meeting rooms and more. The MG21 gooseneck microphone together with the MBG weighted base is ideal for desk or table use.



1 SPEECH OPTIMISED GOOSENECK MICROPHONE

The MG21 condenser electret microphone's frequency response is optimized for speech clarity and intelligibility.

2 INTEGRATED POP FILTER

The integrated pop filter attenuates the energy of plosive sounds, which might exceed the design input capacity of the microphone, leading to clipping, hence improving overall sound quality.

3 Reliable Microphone

Reliable gooseneck microphone designed for use in general in–stalled sound reinforcement applications.

	MG21
Transducer Type	Electret Condenser
Frequency Response	60Hz ~ 17kHz
Impedance	250Ω
Polar Pattern	cardioid
Sensitivity	-39dB (11.2mV)/Pa at 1KHz
THD (Max SPL for 1%)	124dB SPL
Dynamic Range	99dB
Self Noise	25dB SPL A-weighted
Output Connection	3-pin XLR-Male
Power Requirement	DC(Phantom) 12-48V
Dimensions	
Length	555 mm / 21.8in
Head Φ	12.9mm / 0.5in
Weight	220g / 0.49lbs.
Accessories Furnished	Wind screen

FREQUENCY RESPONSE

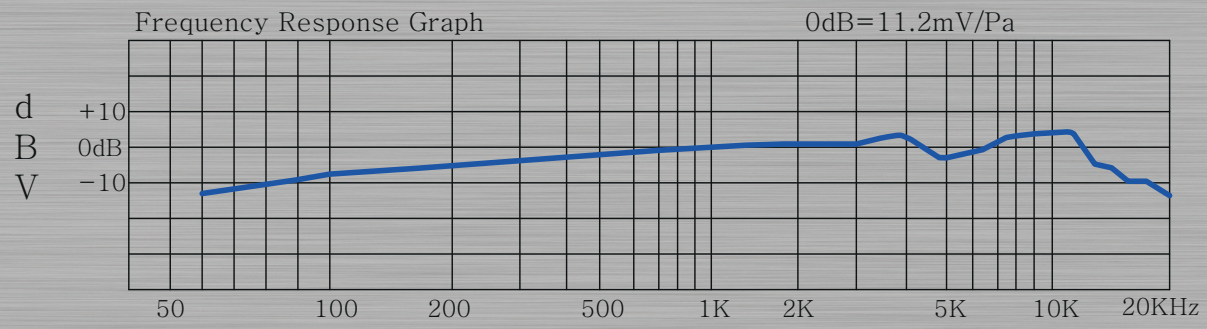

POLAR PATTERN

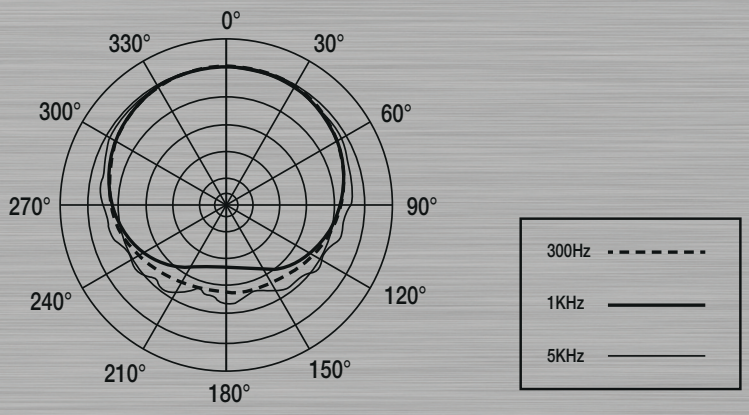

APPLICATION

Application / Model	Speech	Live	Instruments	Type
 MH50	O		O	Dynamic
 MH80	O	O		Dynamic
 MC41P	O		O	Condenser
 MG21	O			Condenser

MG21 CARDIOID CONDENSER GOOSENECK MICROPHONE

DRAWING

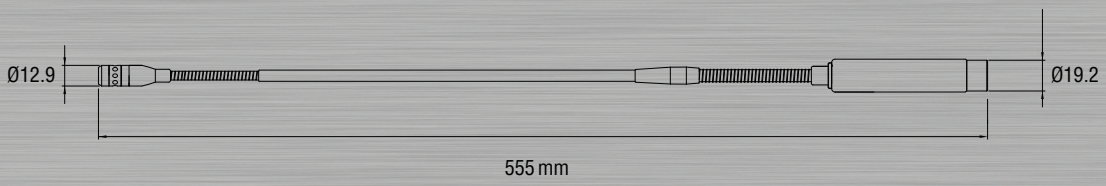

Inter-M Corp. (IMK)

719, Dobong-ro, Dobong-gu, Seoul, Korea
Overseas Sales Team
Tel_ +82-2-2289-8141~7 **Fax**_ +82-2-2289-8149 **E-mail**_ overseas@inter-m.com **www.inter-m.com**

※ Design and specification are subject to be changed for the improvement of product quality without pre notice.

2015. 6. V2