Operation Manual

Audio Matrix Controller

PX-6216



* Rack mount products in the Western Hemisphere(North America, South America, and the Caribbean) do not have handles installed due to customer preference.

interM

Welcome

A personal welcome to you from the management and employees of Inter-M

All of the co-workers here at Inter-M are dedicated to providing excellent products with inherently good value, and we are delighted you have purchased one of our products.

We sincerely trust this product will provide years of satisfactory service, but if anything is not to your complete satisfaction, we will endeavor to make things right.

Welcome to Inter-M, and thank you for becoming part of our worldwide extended family!





This symbol is intended to alert the user to the presence of uninsulated “dangerous voltage” within the product’s enclosure that may be of sufficient magnitude to constitute a risk of electric shock to persons.



This symbol is intended to alert the user to the presence of important operation and maintenance (servicing) instructions in the literature accompanying the appliance.

Caution: To prevent electric shock do not use this (polarized) plug with an extension cord, receptacle or other outlet unless the blades can be fully inserted to prevent blade exposure.

Attentions: Pour prévenir les chocs électriques ne pas utiliser cette fiche polarisée avec un prolongateur, une prise de courant on une autre sortie de courant, sauf si les lames peuvent étre insérées à fond sans en laisser aucune partie à découvert.

WARNING

To prevent fire or shock hazard, do not expose the unit to rain or moisture.

*WARNING FOR YOUR PROTECTION PLEASE READ THE FOLLOWING-WATER AND MOISTURE: Unit should not be used near water(e.g. near a bathtub, washbowl, kitchen sink, laundry tub, in a wet basement, or near a swimming pool, etc). Care should be taken so than objects do not fall and liquids are not spilled into the enclosure through openings.
*Do not install this equipment in a confined space such as a book case or similar unit.
*This apparatus shall not be exposed to dripping or splashing and no objects filled with liquids, such vases, shall be placed on the apparatus.
*This apparatus shall be connected to a mains socket outlet with a protective earthing connection.
*It has heed to be easy to disconnect the device. To disconnect the device from power, separate AC input cable from inlet or unplug the AC Cord.
*The socket-outlet shall be installed near the equipment and shall be easily accessible.

CAUTION

*These servicing instructions are for use by qualified service personnel only. To reduce the risk of electric shock, do not perform any servicing other than that contained in the operating instructions unless you are qualified to do so.

NOTE

*This equipment has been tested and found to comply with the limits for a Class A digital device, pursuant to Part 15 of the FCC Rules. These limits are designed to provide reasonable protection against harmful interference when the equipment is operated in a commercial environment. This equipment generates, uses, and can radiate radio frequency energy and, if not installed and used in accordance with the instruction manual, may cause harmful interference to radio communications. Operation of this equipment in a residential area is likely to cause harmful interference in which case the user will be required to correct the interference at his own expense.

Contents

Unpacking 2

Installation
- Environment 2
- Important Safety Instructions 2

Features 3

Front Panel 4

Rear Panel 5

Equipment Setting and Caution 8

Applications 9

Block Diagram 10

Specifications 11

Service
- Procedures 13
- Schematic 13
- Parts List 13

Variations and Options 13

Warranty 13

Unpacking

Although your PX-6216 is neither complicated nor difficult to operate, we recommend you take a few minutes to read this brief manual and familiarize yourself with the important information regarding product features, setup and operation.

As with most electronic devices, we strongly recommend you retain the original packaging. In the unlikely event the product must be returned for servicing, the original packaging (or reasonable equivalent) is required.

Installation

Environment
Never place this product in an environment which could alter its performance or reduce its service life. Such environments usually include high levels of heat, dust, moisture, and vibration.

IMPORTANT SAFETY INSTRUCTIONS

1. Read these instructions.
2. Keep these instructions.
3. Heed all warnings.
4. Follow all instructions.
5. Do not use this apparatus near water.
6. Clean only with dry cloth.
7. Do not block any ventilation openings. Install in accordance with the manufacturer's instructions.
8. Do not install near any heat sources such as radiators, heat registers, stoves, or other apparatus (including amplifiers) that produce heat.
9. Do not defeat the safety purpose of the polarized or grounding-type plug. A polarized plug has two blades with one wider than the other. A grounding type plug has two blades and a third grounding prong. The wide blade or the third prong are provided for your safety. If the provided plug does not fit into your outlet, consult an electrician for replacement of the obsolete outlet.
10. Protect the power cord from being walked on or pinched particularly at plugs, convenience receptacles, and the point where they exit from the apparatus.
11. Only use attachments/accessories specified by the manufacturer.
12. Use only with the cart, stand, tripod, bracket, or table specified by the manufacturer, or sold with the apparatus. When a cart is used, use caution when moving the cart/apparatus combination to avoid injury from tip-over.
13. Unplug this apparatus during lightning storms or when unused for long periods of time.
14. Refer all servicing to qualified service personnel. Servicing is required when the apparatus has been damaged in any way, such as power-supply cord or plug is damaged, liquid has been spilled or objects have fallen into the apparatus, the apparatus has been exposed to rain or moisture, does not operate normally, or has been dropped.



Features

- 16 X 8 AUDIO MATRIXES

Digital audio matrix, 16 inputs x 8 outputs. Computer controlled, this unit is the main component of the 6000 system 8 bus. (EM, Timer, RM x4, BGM x10).

- PC CONTROL

System Control and configuration is possible via our windows based system software. Remote operation and connectivity is made possible using the DIB-6000.

-PRIORITY BROADCASTING CONTROL

Connected to the EP-6216, emergency panel, timer and 4 remote microphone (RM-6024). The PX-6216 will controls priority broadcastings. Emergency Panel, timer, and remote microphone will have priority and override of BGM broadcasting.

- REMOTE CONTROL OF PERIPHERALS

The PX-6216 will control source peripherals such as CD, Tuner, and Voice File through the four RS-232 terminals.

- VARIOUS BGM INPUTS

1. TYPE A

Connection of BGM sources is possible via the 2 XLR combo jack channels, the 6 XLR channels, and 2 RCA jacks.

Condenser microphones with 24V PHANTOM POWER can be connected on channel 1 and 2. These inputs can select between MIC/Line inputs through setting of operation programs.

2. TYPE B

Connection of BGM sources is possible via the 8 detachable Euroblock terminals and 2 RCA jacks.

Condenser microphones with 24V PHANTOM POWER can be connected on channel 1 and 2. These inputs can select between MIC/Line inputs through setting of operation programs

- DSP AUDIO MATRIX

DSP (Digital Signal Processor) controls signal routing, channel mixing, gains, volume, priority and the 7 band EQ.

- FILE AND PRESET-SETTING

System settings are stored in internal memory. Stored file can be restored should setup file of operation program is deleted or changed. The PX-6216 with the stored file can operate be operated even if the control PC is offline using memory presets.

Front Panel

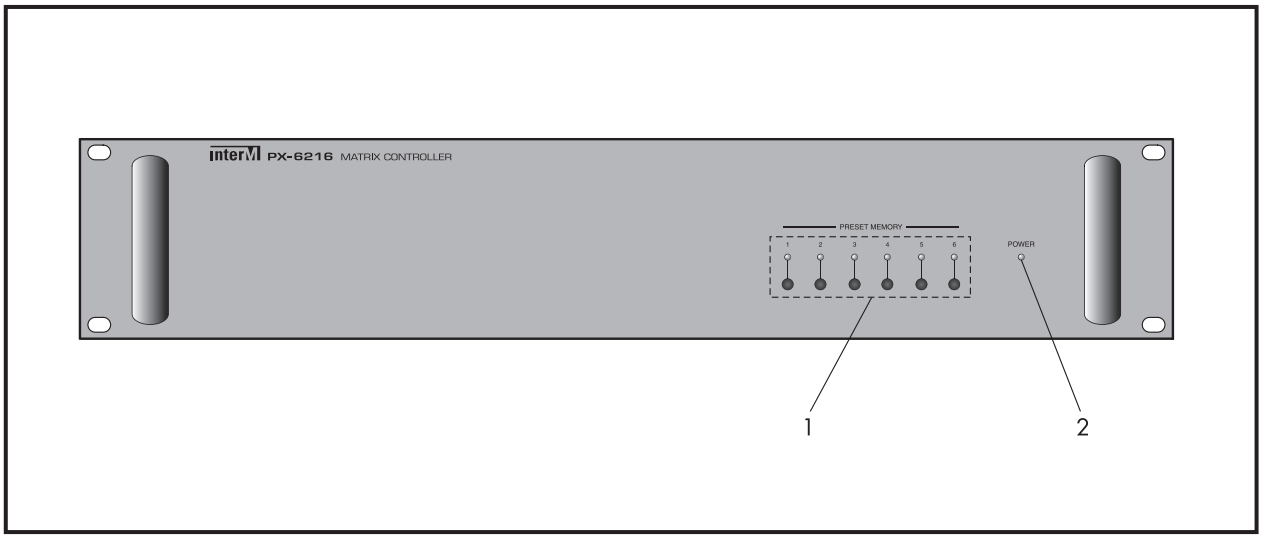

1. PRESET MEMORY BUTTON AND INDICATOR

6 front panel preset buttons can be programmed and operated even when the control PC is offline. LED indicators identify the active present.

2. POWER INDICATOR

This LED will be on when Power the PX-6216 is on. It will blink if communication error with the PC occurs.

Rear Panel

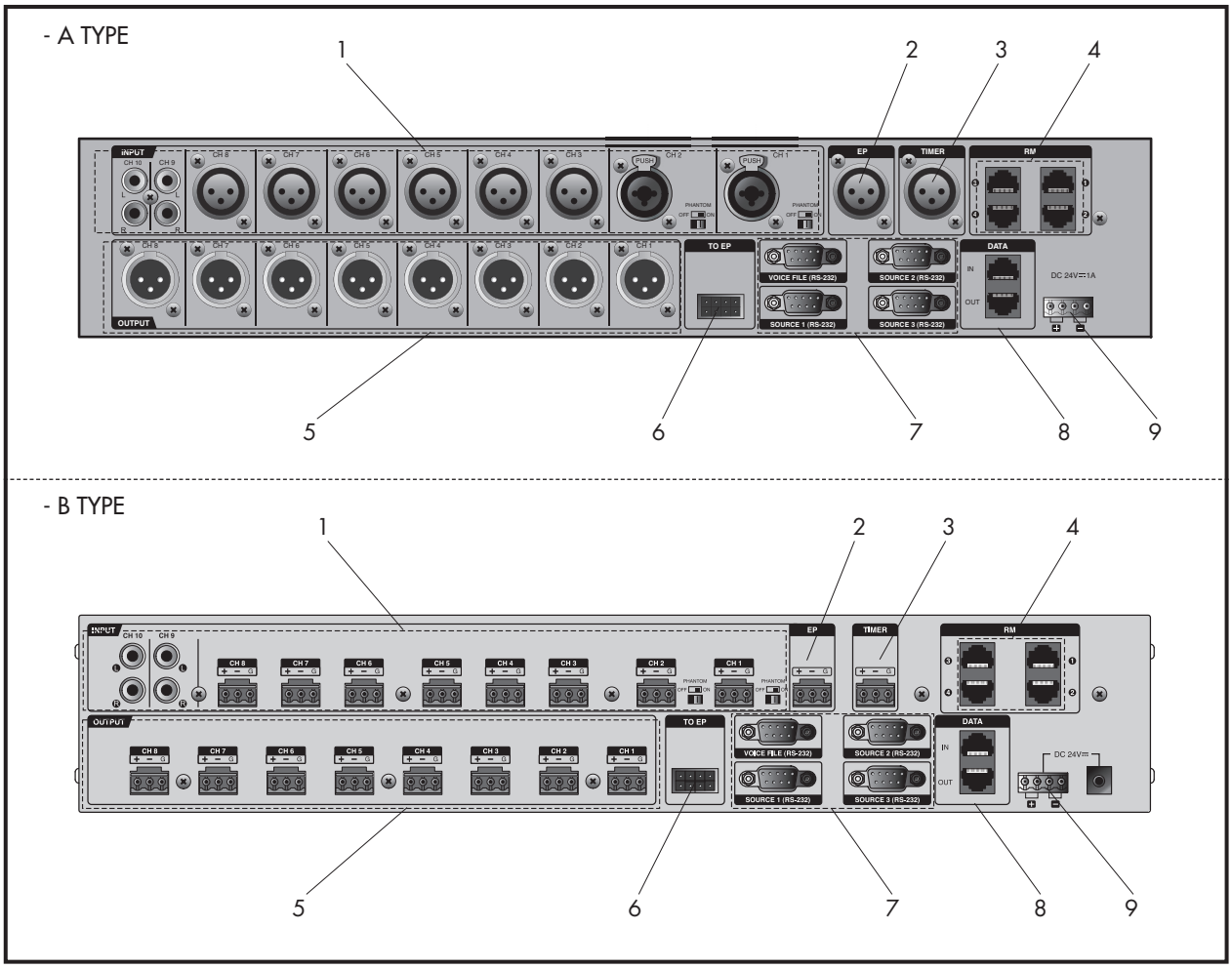

1. BGM INPUT TERMINAL

INPUT 1 and 2 : Connection of BGM sources is possible via the XLR combo jack / detachable Euroblock terminals. Condenser microphones with 24V PHANTOM POWER can be connected on channel 1 and 2. These inputs can select between MIC/Line inputs through setting of operation programs.

- INPUT 3~8 : 6 XLR Jacks / 6 Euroblock connectors
- INPUT 9~10 : 2 RCA stereo input jacks.

2. EMERGENCY AUDIO INPUT TERMINAL

Audio input terminal connecting the emergency panel unit (EP-9216, 9216V, 616, 6216) and allow a priority broadcast from EP via contact connection terminal.

3. TIMER AUDIO INPUT TERMINAL

Audio input terminal connecting the TIMER (PW-9246,642,6242) allows priority broadcasting via timer contact triggers.

4. REMOTE MIC COMMUNICATION TERMINAL

This terminal is used to directly connect RM-6024 remote paging microphones.

This port can be expanded to connect up to 8 paging microphones when connected to the RME-6108 Remote microphone extender.

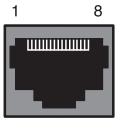

PIN NO.	Function
1	RS-422 DATA - RX+
2	RS-422 DATA - RX-
3	RS-422 DATA - TX-
4	Live Data Input
5	GND
6	RS-422 DATA - TX+
7	Balanced Audio Input - HOT
8	Balanced Audio Input - COLD

5. AUDIO OUTPUT TERMINAL

8 bus balanced audio output terminal.

6. EMERGENCY PANEL (EP) CONNECTION TERMINAL

This terminal allows for connecting emergency panel unit (EP-9216,9216V,616,6216, etc.) with priority broadcasting.

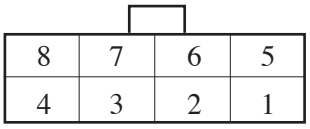

PIN NO.	Function
1	COM
2	DC +24V
3	DC +24V
4	EM SUM
5	TIMER SUM
6	RM1 SUM
7	RM2 SUM
8	FIRE SUM

7. RS-232 SOURCE UNIT CONTROL TERMINAL

RS-232 communication terminal allows control inter-M source units (CDP, TUNER, VOICE FILE, etc.) via the PC operation program.

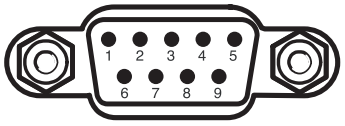

Pin	1	2	3	4	5	6-9
Purpose	Not Used	Receive	Transmit	Not Used	Ground	Not Used

8. DATA LINK IN/OUT TERMINAL

Communication terminal for Windows PC system control.
LINK IN terminal is connected with DIB-6000 and LINK OUT terminal is connected with following equipment.

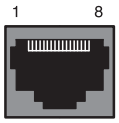

PIN NO.	Function
1	RS-485 Data - A
2	RS-485 Data - B
3	RS-485 Data - Z
4	NA
5	GND
6	RS-485 Data - Y
7	NA
8	NA

9. POWER INPUT TERMINAL

DC Power input terminal. Caution please observe polarity when connecting DC 24V.
Connect to an external power supply or inter-M power distributor. Connect to un-switched power supply.

Equipment Setting and Caution

1. EP CONNECTION

1) When connecting with EP equipment, please connect the matrix terminal of EP and emergency panel connection terminal by using the EP connector supplied as an accessory of the PX-6216.
2) Connect the audio signal of PRE OUT of EP to EP audio input terminal on the top of PX-6216. Volume control of EP input can be set in the equipment setting of operation program.

2. TIMER CONNECTION

1) When connecting with TIMER, connect the Timer contact point input terminal of ECS-6216MS and remote output terminal of Timer.
2) Connect the audio signal of channel out terminal of Timer to the Timer audio input terminal on the top of PX-6216. Volume control of Timer input can be set in the equipment setting of operation program.

3. DATA LINK IN/OUT CONNECTION

1) Connect the LINK IN terminal of PX-6216 and LINK OUT terminal of DIB-6000 with UTP cable wired strait or direct method. Connect the DIB-6000 to PC by using USB cable.
2) Set the termination switch terminal of DIB-6000 to LOAD.
   ※ Communication error may occur if setup is incorrect.
3) Connect the other equipment including ECS-6216MS to each other through LINK IN/OUT terminal.
4) Set the TERMINATION switch of the last equipment in the data link to LOAD. Set the other equipment to OPEN.

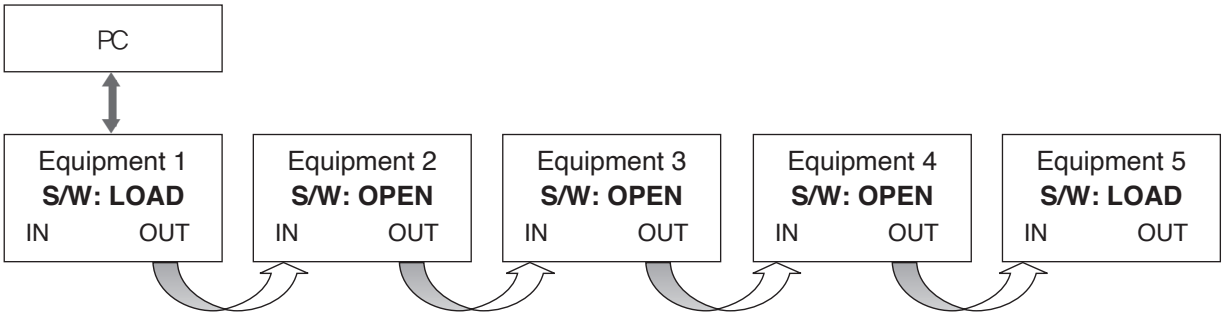

※ Keep the equipment orders when connecting it. Communication error may occur if setup is incorrect.

Applications

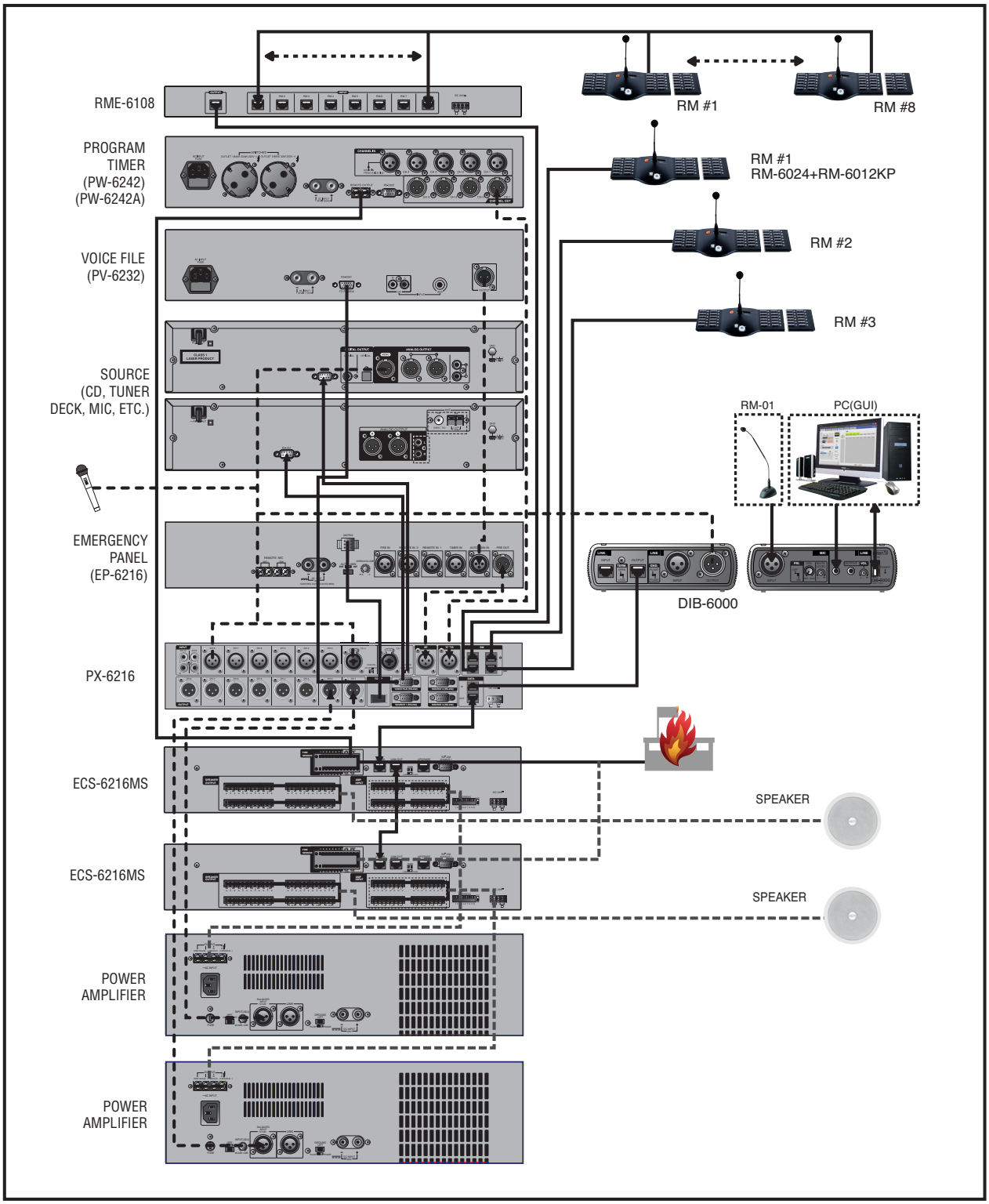

Block Diagram

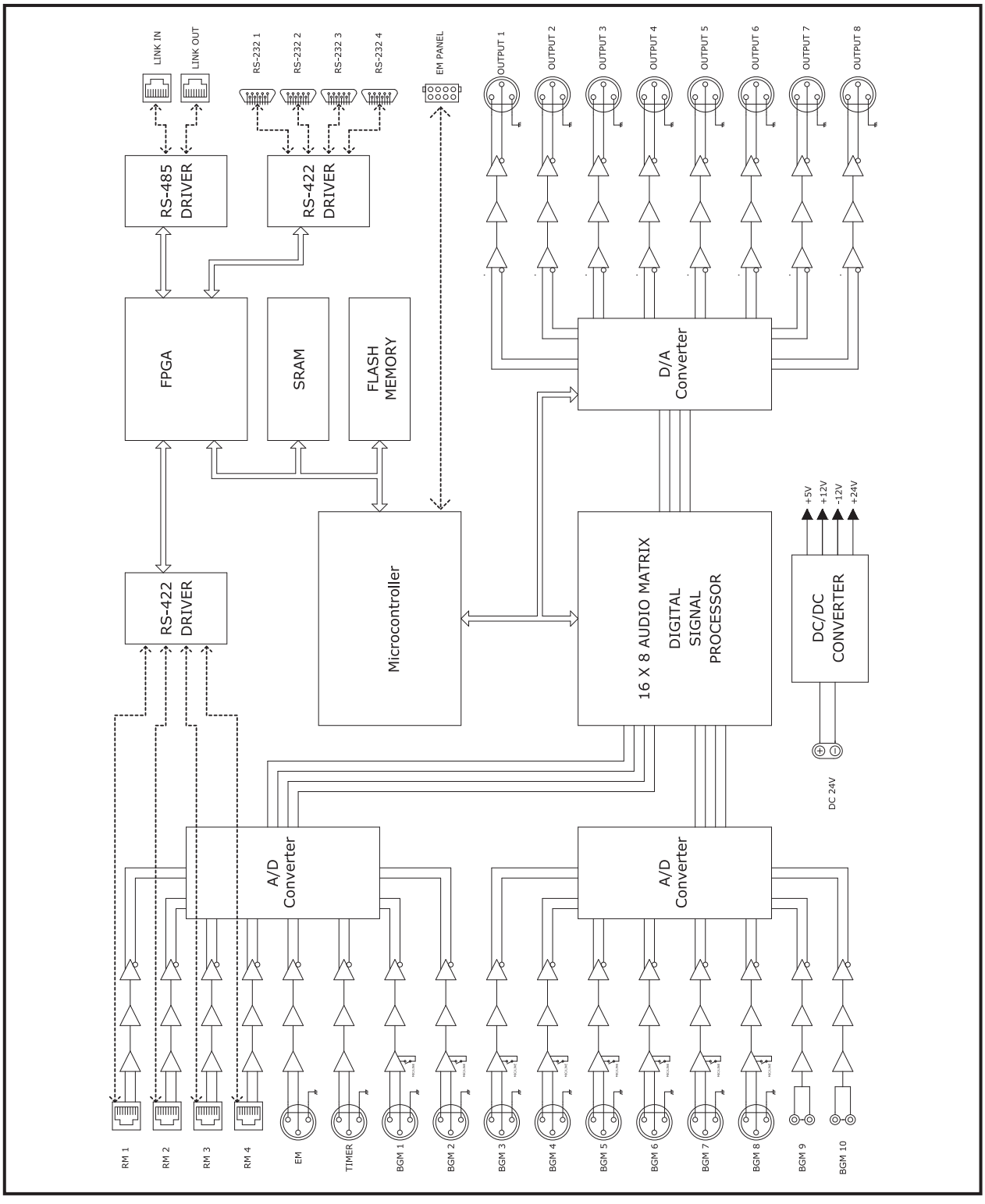

Specifications

		PX-6216
Rated Output		0dBV (Balanced)
Input Sensitivity	EM, TIMER, RM	-10dBV/20kΩ (Balanced)
	BGM 1~8 LINE	-10dBV/3kΩ (Balanced)
	BGM 1~8 MIC	-50dBV/3kΩ (Balanced)
	BGM 9,10 LINE	-10dBV/20kΩ (Unbalanced)
Frequency Response	±3dB	20Hz~20kHz
Total Harmonic Distortion	LINE	Less than 0.01%
	MIC	Less than 0.1%
Signal to Noise Ratio (A-weight Filter)	LINE	Better than 85dB
Maximum S/N	LINE	Better than 100dB (+8dBV Input)
Phantom MIC Power	BGM 1,2	DC 24V
Priority		EM>TIMER>RM1>RM2>RM3>RM4>BGM
Communication Interface Standard	LINK IN/OUT	RS-485 (Max. Distance 1km)
	RM	RS-422 (Max. Distance 1km)
	SOURCE	RS-232 (Max. Distance 12m)
Operation Temperature		-10°C ~ +40°C
Power Source		DC 24V, 900mA
Weight (SET)		4.3kg/9.5lbs
Dimensions (SET)		482(W) x 88(H) x 280(D)mm//19(W)x3.5(H)x11(D)in

* Design and specification are subject to be changed for the improvement of product quality without pre notice.

※ DIMENSIONS

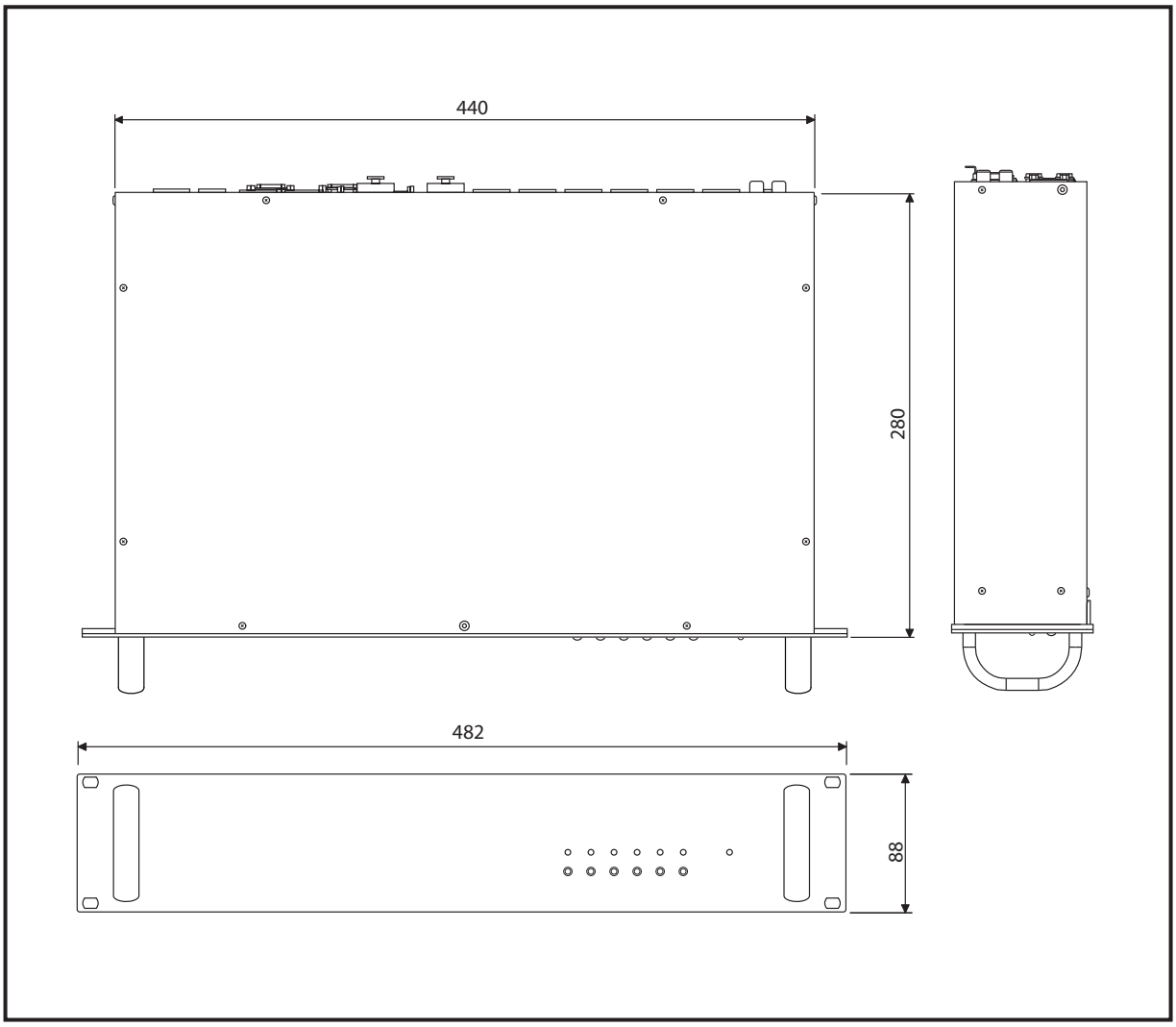

Service

Procedures
Take steps to insure the problem is not related to operator error or other products within the system. Information provided in the troubleshooting portion of this manual may help with this process. Once it is certain that the problem is related to the product contact your warranty provider as described in the warranty section of this manual.

Schematic
A Schematic is available by contacting your warranty provider.

Parts List
A Parts List is available by contacting your warranty provider.

Variations and Options

Variations
Products supplied through legitimate sources are compatible with local AC power requirements.

Options
No optional items are available for this product.

Warranty

Warranty terms and conditions vary by country and may not be the same for all products. Terms and conditions of warranty for a given product may be determined first by locating the appropriate country which the product was purchased in, then by locating the product type.

To obtain specific warranty information and available service locations contact Inter-M directly or the authorized Inter-M Distributor for your specific country or region.

Inter-M, Ltd. (Korea) began operations in 1983.

Since then, Inter-M has grown to become one of the largest manufacturers
of professional audio and commercial sound electronics equipment in the world.

Inter-M has gained worldwide recognition for its own branded products,
as well as private label manufacturing of electronics sold under other names (OEM).

The company is no longer just a Korean company, but rather a global company
that is truly international in scope, with factories and offices in Korea and China,
and sales and marketing operations located in Japan, Europe, and the U.S.A.

With more than 850 employees around the globe,
Inter-M is well-poised for further growth and expansion.

Inter-M Americas, INC.
5666 CORPORATE AVE. CYPRESS, CA 90630
TEL : +1-714-828-2200, FAX : +1-714-828-2210
Home Page : http://www.inter-m.net, E-mail : info@inter-m.net

Inter-M Corporation
SEOUL OFFICE : 719, DOBONG-RO, DOBONG-GU, SEOUL, KOREA
TEL : +82-2-2289-8140~8, FAX : +82-2-2289-8149
Home Page : http://www.inter-m.com, E-mail : overseas@inter-m.com

MADE IN KOREA
June 2021 154243