Operation Manual

Network Streaming Mixing Amplifier

PN-106/112
PN-224/236/248/260



interM

Welcome

A personal welcome to you from the management and employees of Inter-M

All of the co-workers here at Inter-M are dedicated to providing excellent products with inherently good value, and we are delighted you have purchased one of our products.

We sincerely trust this product will provide years of satisfactory service, but if anything is not to your complete satisfaction, we will endeavor to make things right.

Welcome to Inter-M, and thank you for becoming part of our worldwide extended family!





This symbol is intended to alert the user to the presence of uninsulated “dangerous voltage” within the product’s enclosure that may be of sufficient magnitude to constitute a risk of electric shock to persons.



This symbol is intended to alert the user to the presence of important operation and maintenance (servicing) instructions in the literature accompanying the appliance.

Caution: To prevent electric shock do not use this (polarized) plug with an extension cord, receptacle or other outlet unless the blades can be fully inserted to prevent blade exposure.

Attentions: Pour prévenir les chocs électriques ne pas utiliser cette fiche polarisée avec un prolongateur, une prise de courant on une autre sortie de courant, sauf si les lames peuvent étre insérées à fond sans en laisser aucune partie à découvert.
Pour deconnecter completement l’appareil du reseau d’alimentation. deconnecter le cordon d’alimentation de la prise murale.
La prise du reseau d’alimentation doit demeurer aisement accessible.

WARNING

To prevent fire or shock hazard, do not expose the unit to rain or moisture.

*WARNING FOR YOUR PROTECTION PLEASE READ THE FOLLOWING-WATER AND MOISTURE: Unit should not be used near water(e.g. near a bathtub, washbowl, kitchen sink, laundry tub, in a wet basement, or near a swimming pool, etc). Care should be taken so than objects do not fall and liquids are not spilled into the enclosure through openings.
*CLASS 2 WIRING (Adjacent to speaker terminal): The speaker output of this apparatus can exceed 10 Watts and could be a shock injury. Connection to speakers should be performed by a skilled person.
*Do not install this equipment in a confined space such as a book case or similar unit.
*Warning : To reduce the risk of fire or electric shock, do not expose this apparatus to rain or moisture and objects filled with liquids, such as vases, should not be placed on this apparatus.
*This apparatus shall be connected to a mains socket outlet with a protective earthing connection.
*To completely disconnect this apparatus from the AC mains, disconnect the power supply cord plug from the AC receptacle.
*The mains plug of the power supply cord shall remain readily accessible.

CAUTION

*These servicing instructions are for use by qualified service personnel only. To reduce the risk of electric shock, do not perform any servicing other than that contained in the operating instructions unless you are qualified to do so.

NOTE

*This equipment has been tested and found to comply with the limits for a Class A digital device, pursuant to Part 15 of the FCC Rules. These limits are designed to provide reasonable protection against harmful interference when the equipment is operated in a commercial environment. This equipment generates, uses, and can radiate radio frequency energy and, if not installed and used in accordance with the instruction manual, may cause harmful interference to radio communications. Operation of this equipment in a residential area is likely to cause harmful interference in which case the user will be required to correct the interference at his own expense.

Contents

Unpacking 2

Installation
- Environment 2
- Important Safety Instructions 2

Features 3

Contents and Accessories 3

Front Panel 4

Rear Panel 5

How to use the front panel controls 8

Applications 9

Troubleshooting 10

Block Diagram 11

Specifications 12

Service
- Procedures 16
- Schematic 16
- Parts List 16

Variations and Options 16

Warranty 16

Unpacking

Although your PN-106/112/224/236/248/260 is neither complicated nor difficult to operate, we recommend you take a few minutes to read this brief manual and familiarize yourself with the important information regarding product features, setup and operation.

As with most electronic devices, we strongly recommend you retain the original packaging. In the unlikely event the product must be returned for servicing, the original packaging (or reasonable equivalent) is required.

Installation

Environment
Never place this product in an environment which could alter its performance or reduce its service life. Such environments usually include high levels of heat, dust, moisture, and vibration.

IMPORTANT SAFETY INSTRUCTIONS

1. Read these instructions.
2. Keep these instructions.
3. Heed all warnings.
4. Follow all instructions.
5. Do not use this apparatus near water.
6. Clean only with dry cloth.
7. Do not block any ventilation openings. Install in accordance with the manufacturer's instructions.
8. Do not install near any heat sources such as radiators, heat registers, stoves, or other apparatus (including amplifiers) that produce heat.
9. Do not defeat the safety purpose of the polarized or grounding-type plug. A polarized plug has two blades with one wider than the other. A grounding type plug has two blades and a third grounding prong. The wide blade or the third prong are provided for your safety. If the provided plug does not fit into your outlet, consult an electrician for replacement of the obsolete outlet.
10. Protect the power cord from being walked on or pinched particularly at plugs, convenience receptacles, and the point where they exit from the apparatus.
11. Only use attachments/accessories specified by the manufacturer.
12. Use only with the cart, stand, tripod, bracket, or table specified by the manufacturer, or sold with the apparatus. When a cart is used, use caution when moving the cart/apparatus combination to avoid injury from tip-over.
13. Unplug this apparatus during lightning storms or when unused for long periods of time.
14. Refer all servicing to qualified service personnel. Servicing is required when the apparatus has been damaged in any way, such as power-supply cord or plug is damaged, liquid has been spilled or objects have fallen into the apparatus, the apparatus has been exposed to rain or moisture, does not operate normally, or has been dropped.



Features

- HIGH-POWERED, HIGH-CAPACITY CLASS-D POWER AMPLIFIER
High-powered, High-capacity CLASS-D Power Amplifier was applied.
PN-106: 60W, PN-112: 120W, PN-224: 240W, PN-236: 360W, PN-248: 480W, PN-260: 600W

- DESIGN OF 1U/2U SIZE, SWITCH MODE POWER SUPPLY (SMPS) TECHNOLOGY
This device design of 1U (PN-106/112), 2U (PN-224/236/248/260) size and uses highly efficient, light weight SMPS technology.

- 1.3INCH OLED SCREEN
User can check various information from this screen.

- ANALOG AUDIO INPUT TERMINAL
XLR, RCA Analog Audio input terminal is provided.

- CUSTOMIZABLE BROADCASTING PRIORITY
User can customize the broadcasting priority. When there is an input with a higher priority, inputs of lower priorities are muted.

- AOE(AUDIO OVER ETHERNET) AUDIO STREAMING
Integration software (MS-N300) let to you receive audio data as real-time.

- SELECTABLE OUTPUT IMPEDANCE (70V/100V/LOW-Z)
User can select the output impedance between 70V/100V/Low-Z with the selector switch.

- REMOTE CONTROL AND MANAGEMENT VIA NETWORK
User can adjust the volume of each channel and the master volume or manage the whole system via accessing the setting web page through network.

- HIBERNATION
User can set the device to hibernate via setting web page.
When the device is hibernated, the power consumption is minimized. Waking up takes approx 5 seconds for PN-106/112, and 10 seconds for PN-224/236/248/260.

- SLEEP/WAKEUP
The device automatically goes into the sleep mode when there is no audio input for certain time to reduce the power consumption.
User can adjust the setting or disable the sleep mode via setting web page.
The device automatically wakes up when there is an audio input.

Contents and Accessories

1. **AC cord x 1EA**
2. **Operation manual x 1EA**
3. **LAN Cable (500mm) x 1EA**

Front Panel

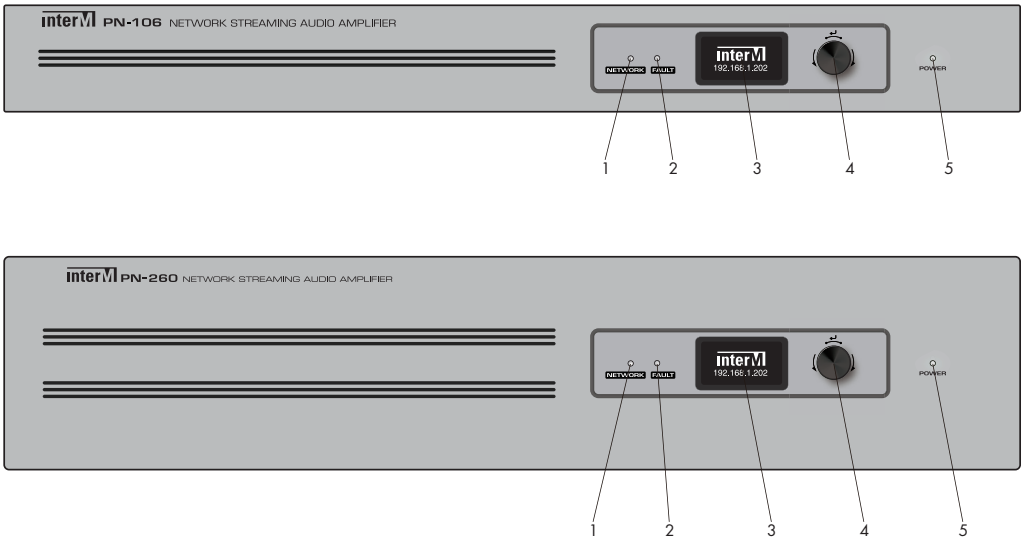

1. **NETWORK STATUS LED**
   Indicates the network status. LED is off when the device is in hibernation.

2. **AMPLIFIER FAULT LED**
   - RED: Amplifier fault condition
   - AMBER: Blinks when the device is in hibernation or sleep mode
   - GREEN: Input signal is overloaded
   - OFF: Normal condition

3. **OLED DISPLAY**
   Network status, Master Volume is displayed on OLED DISPLAY.
   - IP Address, Subnet mask, DNS Server, Mac Address, Network Usage, Master Volume

4. **DISPLAY CONTROL KNOB**
   This changes the information of the display or adjusts the master volume.
   Pushing the knob switches between information and the master volume control.

5. **POWER LED**
   - GREEN: Ready
   - AMBER: Hibernation or Booting up

Rear Panel

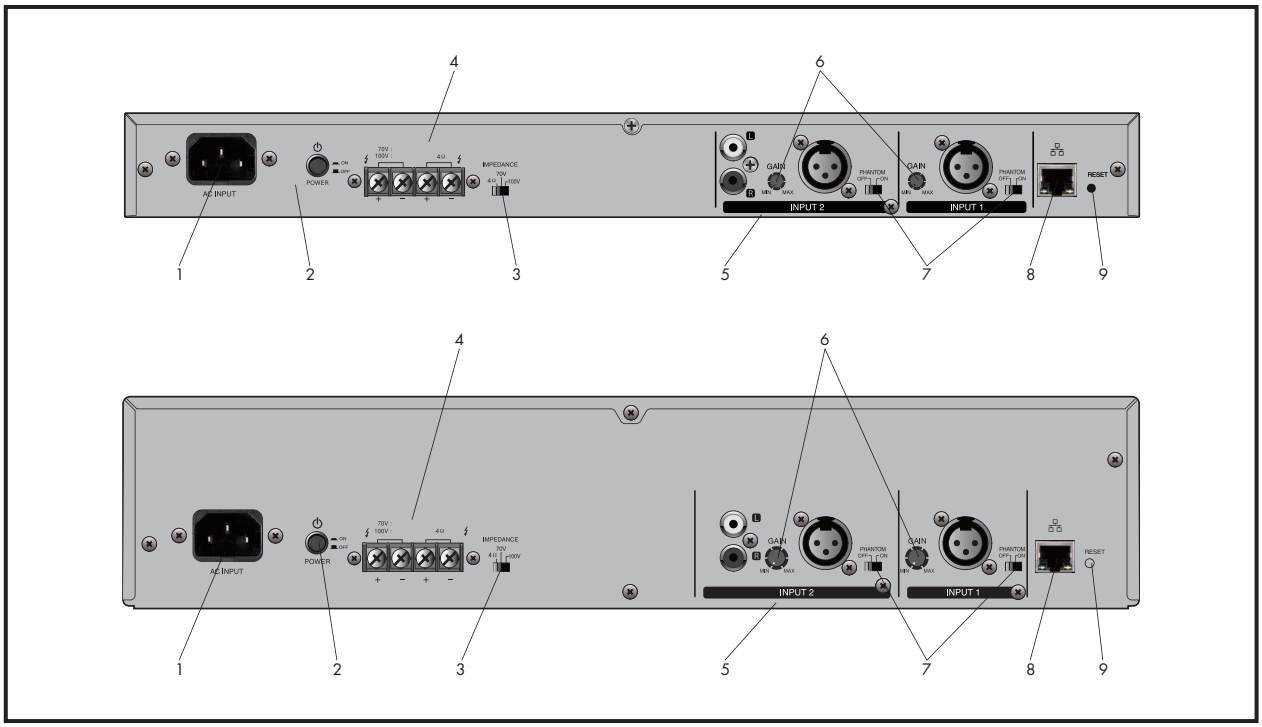

1. AC INPUT

It is a terminal to supply power to this device. Do not bend by force, pull, twist, heat, or cut the power cord. It may cause a fire or electric shock by damaging the cord.

2. AC POWER SWITCH

This switches the device power ON/OFF.

3. IMPEDANCE SELECTOR

Selects the amplifier's output impedance

※ Caution: Choose adequate impedance before connecting a speaker to prevent damaging the speaker

4. SPEAKER TERMINALS

Connect speakers to these terminals. Left two terminals are for high-impedance connection and right two terminals are for low-impedance connection.

※ Connecting Speakers

Before connecting speakers to PN-Series unit, be sure to disconnect the AC power cable.

FOR 100V TERMINAL

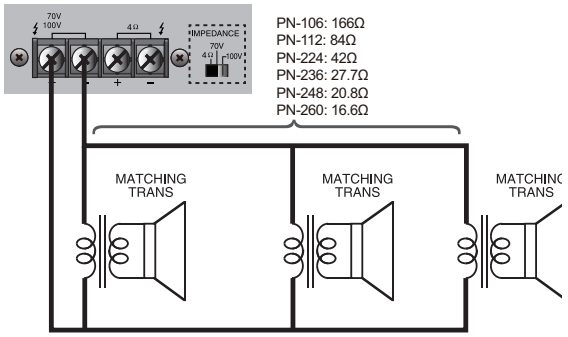

FOR 70V TERMINAL

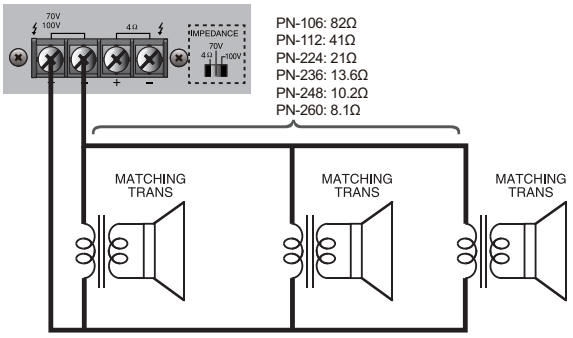

FOR 4Ω(8Ω) TERMINAL

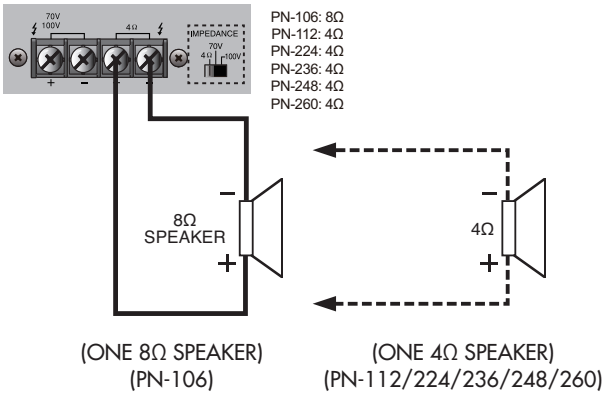

※ Select 4Ω(8Ω) for 4Ω(8Ω) output. (PN-106: 8Ω, PN-112/224/236/248/260: 4Ω)

※ Please make sure not to use 4Ω(8Ω), 70V, 100V terminals simultaneously.

※ NOTE:

1. Make certain that the total impedance is not less than the rated impedance indicated.
2. Please make sure not to use 4Ω(8Ω), 70V, 100V terminals
3. Impedance selection switch should be set properly to use high impedance output terminal. (70V, 100V)

5. AUDIO INPUT TERMINALS

Connect audio inputs to these terminals.
INPUT 1: XLR connector
INPUT 2: XLR Connector or RCA
Please use a balanced cable for the XLR connectors. Refer to the picture below for an unbalanced connection

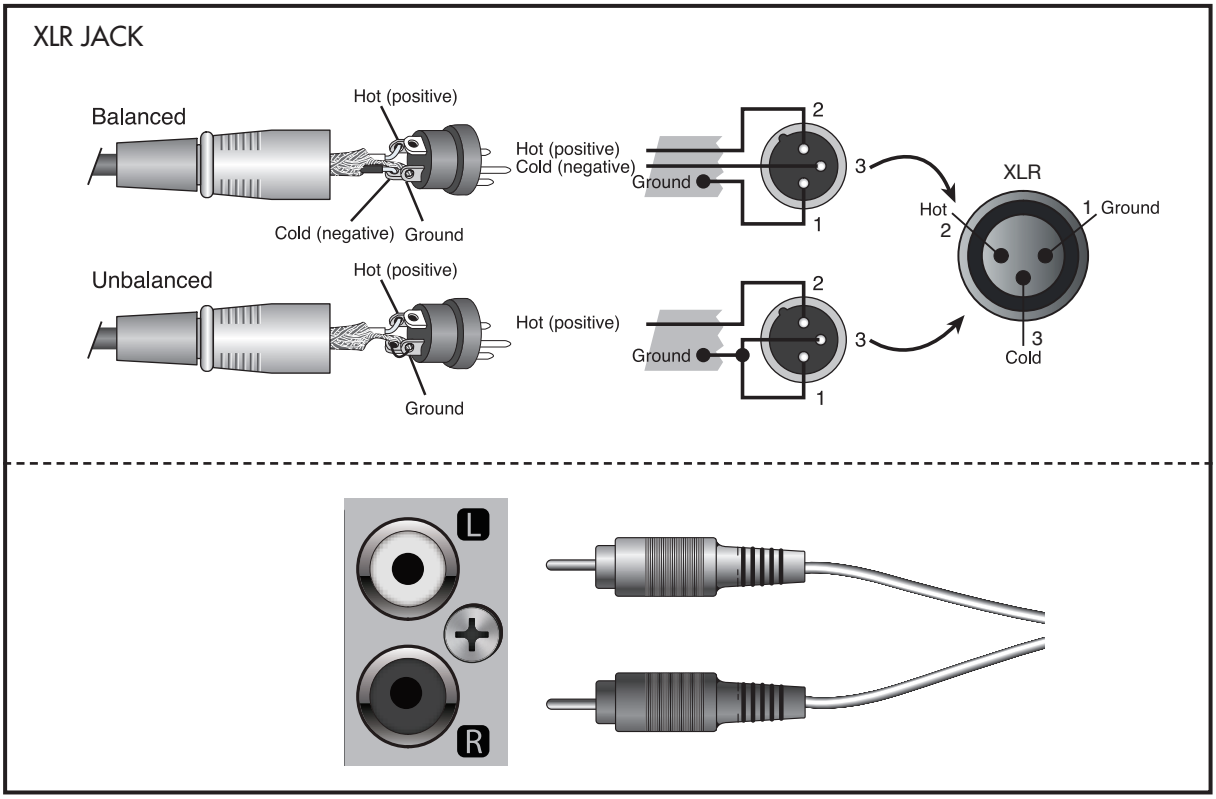

Connect a stereo output source device to the RCA connectors of the INPUT 2. (Unbalanced, 0dBV/1Vrms)

6. INPUT GAIN

Adjust the GAIN of each INPUT 1, 2. (Min: +10dB, Max: +60dB)
Please note that the GAIN control for the RCA jack of INPUT 2 is not provided

7. MIC PHANTOM POWER ON/OFF SWITCH

When the switch is ON, DC 24V is supplied to the XLR jack of INPUT 1, 2 to power electret microphones.
Please note that the PHANTOM POWER SWITCH does not affect the RCA jack of INPUT 2
※ Caution: Make sure that this switch is in OFF position when connecting dynamic microphones

8. ETHERNET PORT

Connect a network cable to this port. User can control the device via setting web page.
※ Refer to the Software Manual for setting up the device. Please download the manual from our website(www.inter-m.net).

9. FACTORY RESET SWITCH

Press more than 10 seconds to reset the device to the factory settings.

How to use the front panel controls

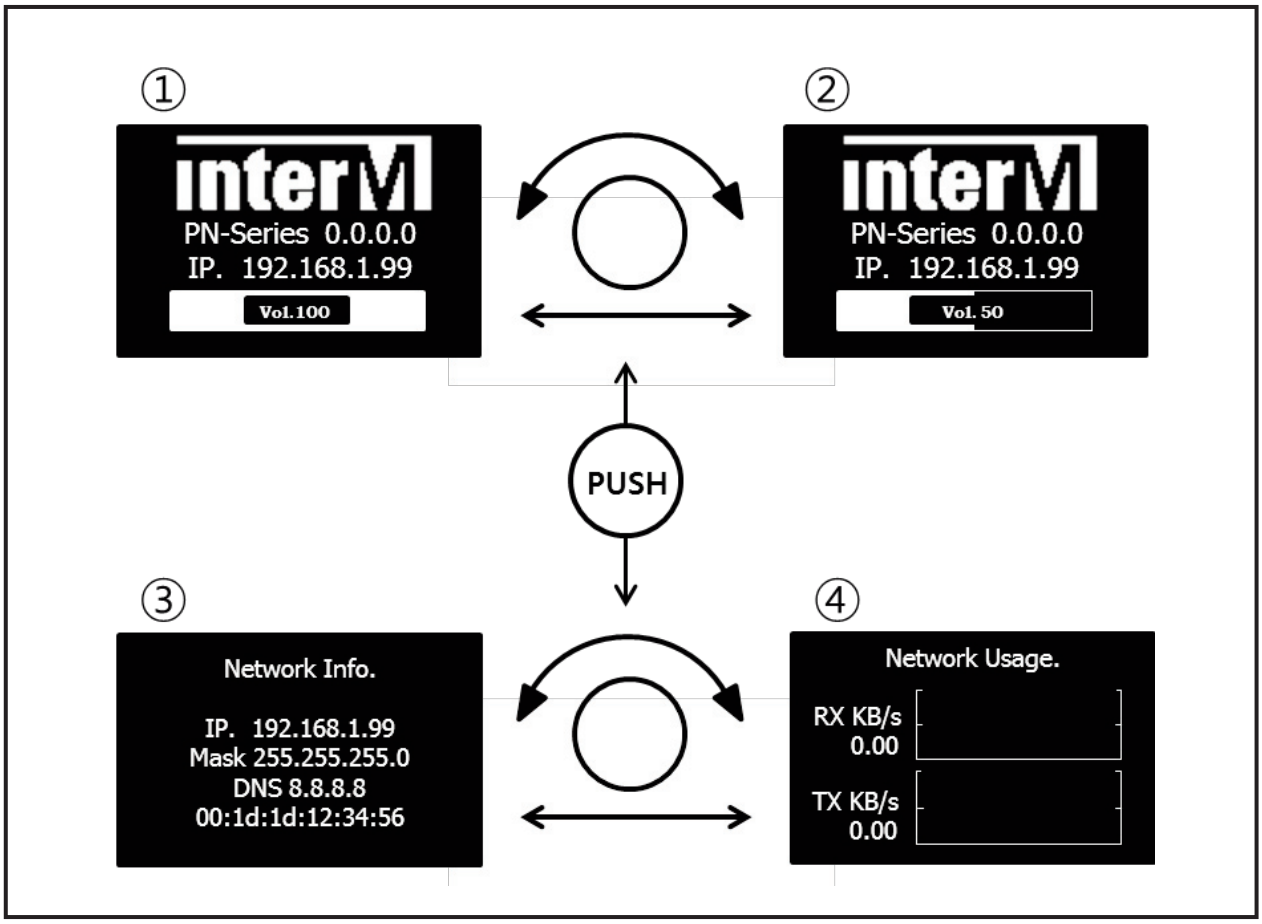

① The device is ready. Model name, S/W version, network information, and master volume level are displayed.
② Turn the knob to the clockwise direction increases the master volume level, and turn to the counter-clockwise direction to lower the master volume level.
③ Push the knob switches to the Network info. screen. IP, Subnet Mask, DNS, and Mac Address are displayed.
④ Turn the knob to any direction switches to the Network Usage screen. RX/TX data rates are displayed.
※ Push the knob at the Network Info. or Network Usage screen switches back to the initial status.

Applications

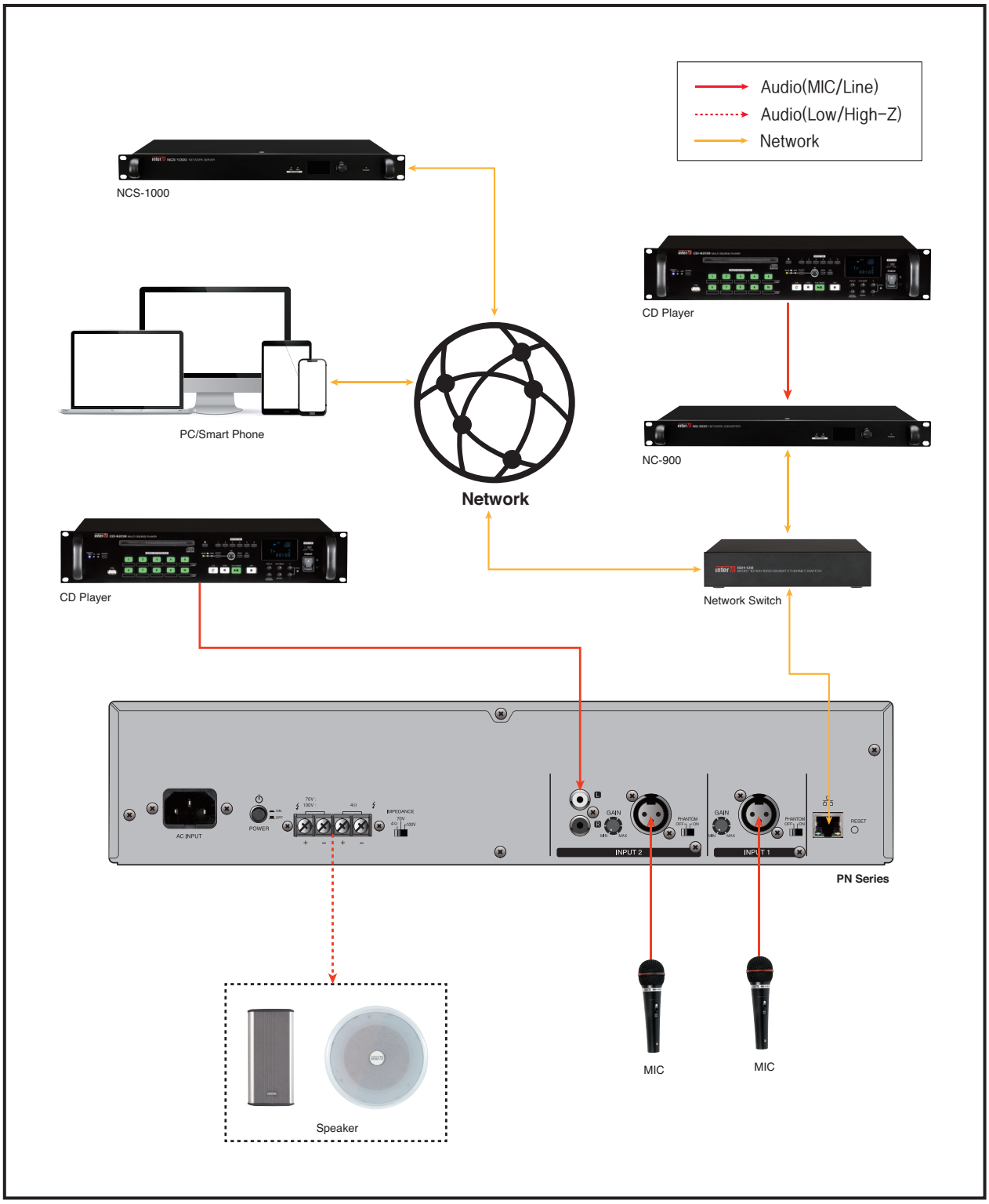

Troubleshooting

Issue	Solution
No audio output	1) Check the power status of the amplifier 2) Check the impedance switch is in adequate position 3) Check volume level or MUTE status at the setting web page 4) Check the speaker line connection
Audio cuts off	1) Check if the sum of total speakers' output power does not exceed the rated output of the amplifier
Audio output is distorted	1) Adjust the input level or master volume at the setting web page 2) Check volume of input channel or master volume in web page
Priority mute doesn't work	1) Check the priority setting at the setting web page

Block Diagram

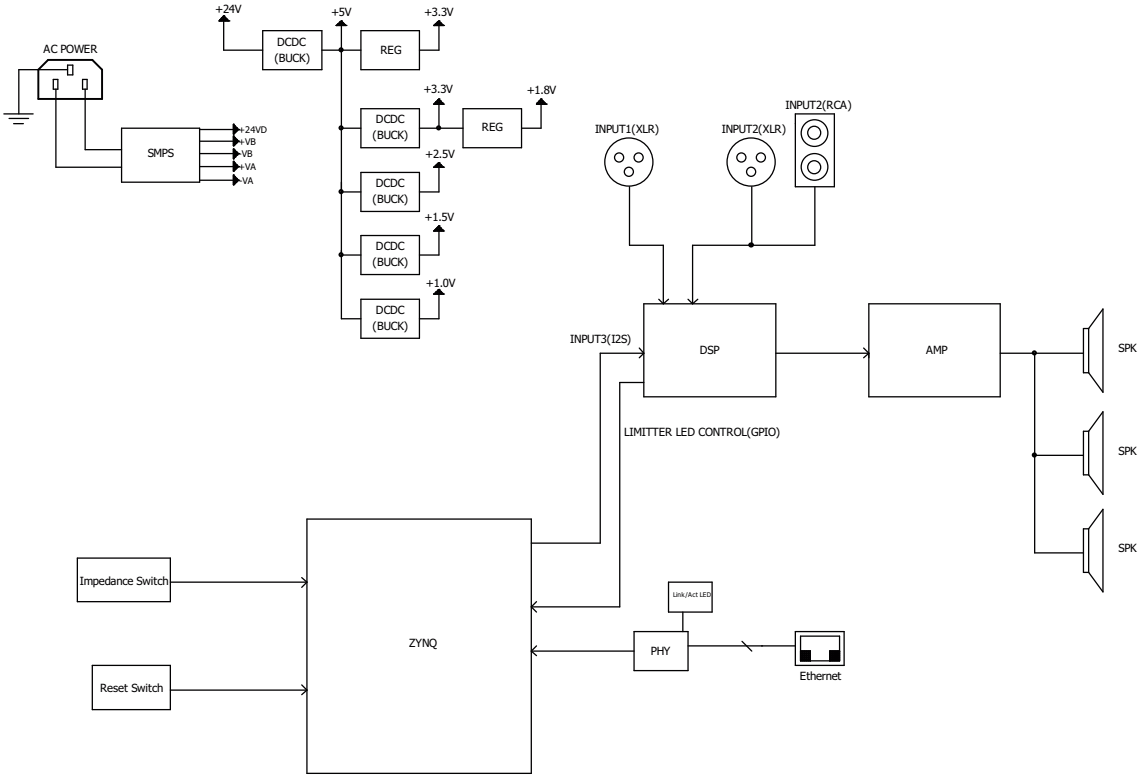

Specifications (PN-106/112)

		PN-106	PN-112
Output Power (1kHz, THD. 1%, AES17)	Low-Z/70V/100V	60W	120W
Frequency Response (1W, 0±3dB, 20kHz LPF)	LINE / Audio Client	80Hz~15kHz	
	MIC	100Hz~15kHz	
THD (Rated Power, 1kHz, AES17)		Less than 1%	
S/N (S/N, A-WTD) @1kHz	LINE / Audio Client	Better than 70dB	
	MIC	Better than 55dB	
Input Sensitivity / Impedance			
Input 1 / Input Impedance	MIC	-60dBV / 2kΩ (Balanced)	
Input 2 / Input Impedance	LINE	0dBV / 24kΩ (Unbalanced)	
	MIC	-60dBV / 2kΩ (Balanced)	
Input 3 (Network)	Audio Client	0dBV	
Speaker Output Level / Impedance		100V / 166Ω	100V / 84Ω
		70V/ 82Ω	70V / 41Ω
		22V / 8Ω	22V / 4Ω
Network Communication		100/1000 base-T (RJ-45)	
Operating Temperature		-10℃ ~ +40℃	
Operating Power		AC 120-240V, 50/60Hz	
Power consumption (Rated/8 W output)		55W	
Weight (Set)		4.49kg/9.89lb	
Dimensions (Set)		420(W) x 44(H) x 320(D)mm/16.5(W) x 1.7(H) x 12.6(D)in	

* Design and specification are subject to be changed for the improvement of product quality without pre notice.

Specifications (PN-224/236/248/260)

		PN-224	PN-236	PN-248	PN-260
Output Power (1kHz, THD. 1%,AES17)	Low-Z/70V/100V	240W	360W	480W	600W
Frequency Response (1W, 0±3dB, 20kHz LPF)	LINE / Audio Client	80Hz~15kHz			
	MIC	100Hz~15kHz			
THD (Rated Power, 1kHz, AES17)		Less than 1%			
S/N (S/N, A-WTD) @1kHz	LINE / Audio Client	Better than 70dB			
	MIC	Better than 55dB			
Input Sensitivity / Impedance					
Input 1 / Input Impedance	MIC	-60dBV / 2kΩ (Balanced)			
Input 2 / Input Impedance	LINE	0dBV / 24kΩ (Unalanced)			
	MIC	-60dBV / 2kΩ (Balanced)			
Input 3 (Network)	Audio Client	0dBV			
Speaker Output Level / Impedance		100V /42Ω	100V /27.7Ω	100V /20.8Ω	100V /16.6Ω
		70V / 21Ω	70V/ 13.6Ω	70V / 10.2Ω	70V / 8.1Ω
		31V / 4Ω	38V / 4Ω	44V / 4Ω	49V / 4Ω
Network Communication		100/1000 base-T (RJ-45)			
Operating Temperature		-10℃ ~ +40℃			
Operating Power		AC 220-240V, 50/60Hz		AC 120V-240V, 50/60Hz	
Power consumption (Rated/8 W output)		110W		150W	
Weight (Set)		5.02kg/11.06lb		5.23kg/11.53lb	
Dimensions (Set)		420(W) x 88(H) x 320(D)mm/16.5(W) x 3.5(H) x 12.6(D)in			

* Design and specification are subject to be changed for the improvement of product quality without pre notice.

※ **DIMENSIONS (PN-106/112)**

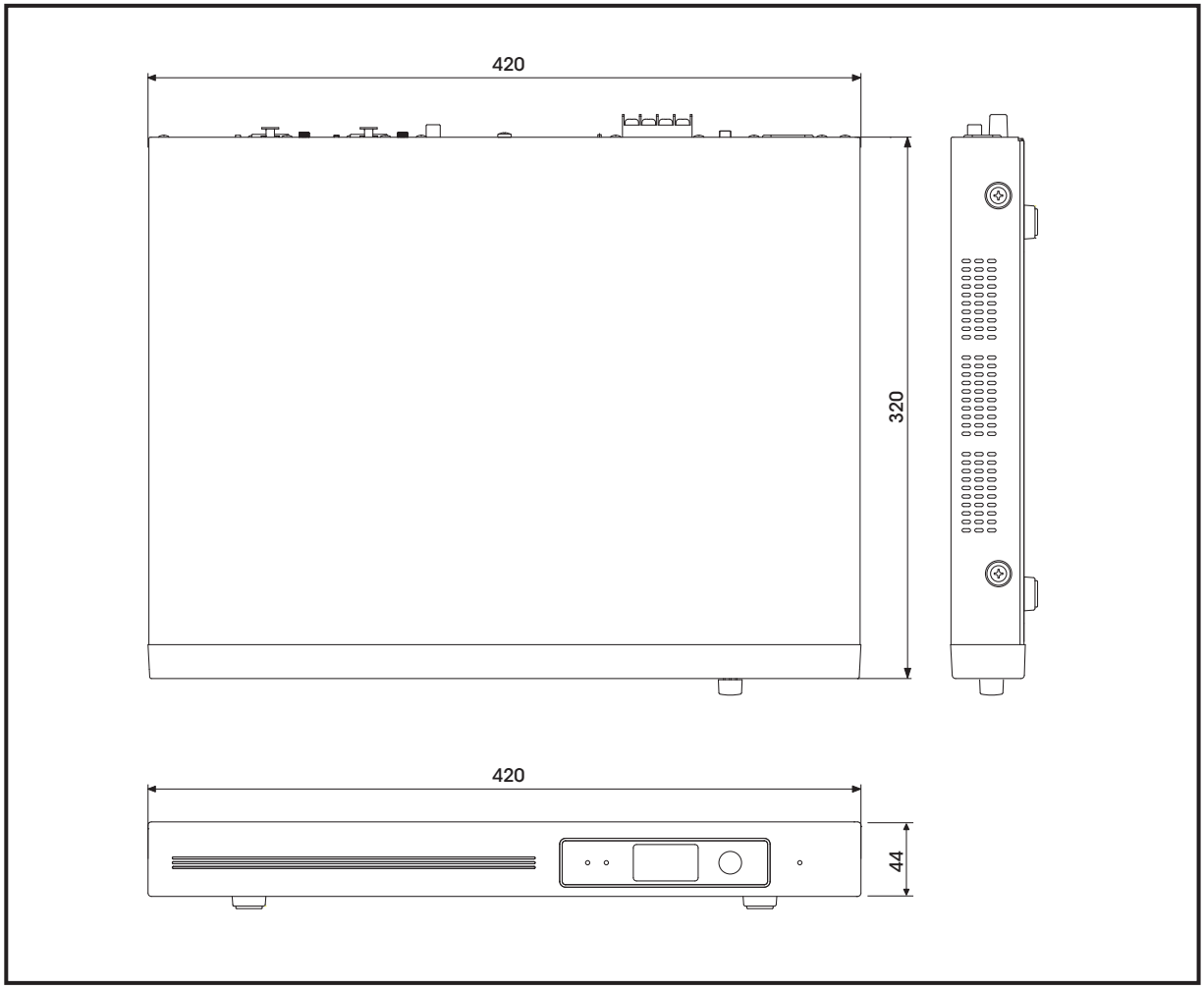

※ **DIMENSIONS (PN-224/236/248/260)**

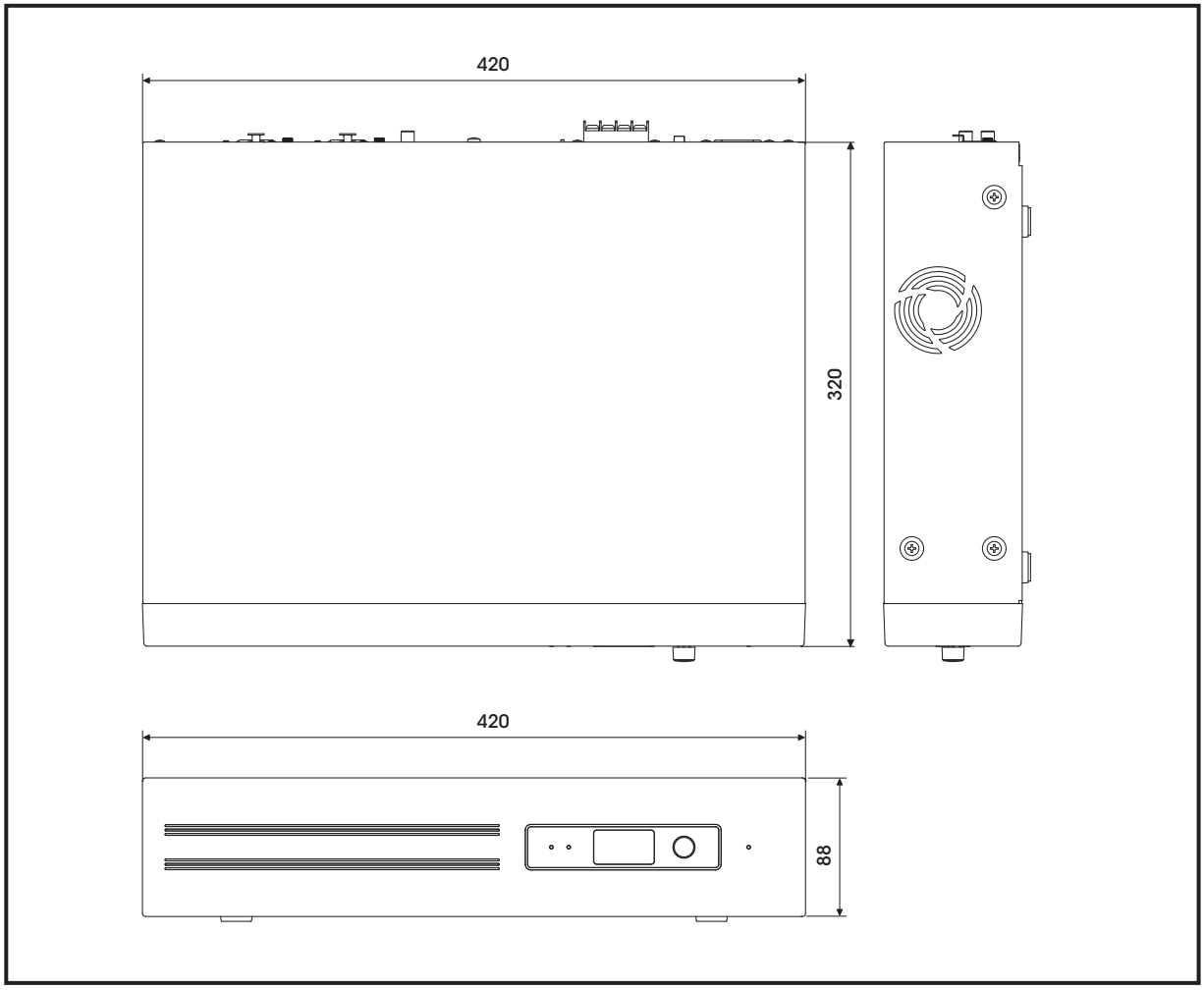

Service

Procedures
Take steps to insure the problem is not related to operator error or other products within the system. Information provided in the troubleshooting portion of this manual may help with this process. Once it is certain that the problem is related to the product contact your warranty provider as described in the warranty section of this manual.

Schematic
A Schematic is available by contacting your warranty provider.

Parts List
A Parts List is available by contacting your warranty provider.

Variations and Options

Variations
Products supplied through legitimate sources are compatible with local AC power requirements.

Options
No optional items are available for this product.

Warranty

Warranty terms and conditions vary by country and may not be the same for all products. Terms and conditions of warranty for a given product may be determined first by locating the appropriate country which the product was purchased in, then by locating the product type.

To obtain specific warranty information and available service locations contact Inter-M directly or the authorized Inter-M Distributor for your specific country or region.

Inter-M, Ltd. (Korea) began operations in 1983.

Since then, Inter-M has grown to become one of the largest manufacturers
of professional audio and commercial sound electronics equipment in the world.

Inter-M has gained worldwide recognition for its own branded products,
as well as private label manufacturing of electronics sold under other names (OEM).

The company is no longer just a Korean company, but rather a global company
that is truly international in scope, with factories and offices in Korea and China,
and sales and marketing operations located in Japan, Europe, and the U.S.A.

With more than 850 employees around the globe,
Inter-M is well-poised for further growth and expansion.

Inter-M Americas, INC.
5666 CORPORATE AVE. CYPRESS, CA 90630
TEL : +1-714-828-2200, FAX : +1-714-828-2210
Home Page : http://www.inter-m.net, E-mail : info@inter-m.net

Inter-M Corporation
SEOUL OFFICE : 719, DOBONG-RO, DOBONG-GU, SEOUL, KOREA
TEL : +82-2-2289-8140~8, FAX : +82-2-2289-8149
Home Page : http://www.inter-m.com, E-mail : overseas@inter-m.com

MADE IN KOREA
August 2021 154825