Operation Manual

Network Converter

NC-900



* Rack mount products in the Western Hemisphere(North America, South America, and the Caribbean) do not have handles installed due to customer preference.

interM

Welcome

A personal welcome to you from the management and employees of Inter-M

All of the co-workers here at Inter-M are dedicated to providing excellent products with inherently good value, and we are delighted you have purchased one of our products.

We sincerely trust this product will provide years of satisfactory service, but if anything is not to your complete satisfaction, we will endeavor to make things right.

Welcome to Inter-M, and thank you for becoming part of our worldwide extended family!





This symbol is intended to alert the user to the presence of uninsulated “dangerous voltage” within the product’s enclosure that may be of sufficient magnitude to constitute a risk of electric shock to persons.



This symbol is intended to alert the user to the presence of important operation and maintenance (servicing) instructions in the literature accompanying the appliance.

Caution: To prevent electric shock do not use this (polarized) plug with an extension cord, receptacle or other outlet unless the blades can be fully inserted to prevent blade exposure.

Attentions: Pour prévenir les chocs électriques ne pas utiliser cette fiche polarisée avec un prolongateur, une prise de courant on une autre sortie de courant, sauf si les lames peuvent étre insérées à fond sans en laisser aucune partie à découvert.
Pour deconnecter completement l’appareil du reseau d’alimentation. deconnecter le cordon d’alimentation de la prise murale.
La prise du reseau d’alimentation doit demeurer aisement accessible.

WARNING

To prevent fire or shock hazard, do not expose the unit to rain or moisture.

*WARNING FOR YOUR PROTECTION PLEASE READ THE FOLLOWING-WATER AND MOISTURE: Unit should not be used near water(e.g. near a bathtub, washbowl, kitchen sink, laundry tub, in a wet basement, or near a swimming pool, etc). Care should be taken so than objects do not fall and liquids are not spilled into the enclosure through openings.
*Do not install this equipment in a confined space such as a book case or similar unit.
*Warning : To reduce the risk of fire or electric shock, do not expose this apparatus to rain or moisture and objects filled with liquids, such as vases, should not be placed on this apparatus.
*This apparatus shall be connected to a mains socket outlet with a protective earthing connection.
*To completely disconnect this apparatus from the AC mains, disconnect the power supply cord plug from the AC receptacle.
*The mains plug of the power supply cord shall remain readily accessible.

CAUTION
*These servicing instructions are for use by qualified service personnel only. To reduce the risk of electric shock, do not perform any servicing other than that contained in the operating instructions unless you are qualified to do so.

NOTE
*This equipment has been tested and found to comply with the limits for a Class A digital device, pursuant to Part 15 of the FCC Rules. These limits are designed to provide reasonable protection against harmful interference when the equipment is operated in a commercial environment. This equipment generates, uses, and can radiate radio frequency energy and, if not installed and used in accordance with the instruction manual, may cause harmful interference to radio communications. Operation of this equipment in a residential area is likely to cause harmful interference in which case the user will be required to correct the interference at his own expense.

Contents

Unpacking 2

Installation
- Environment 2
- Important Safety Instructions 2

Overview 3

Features 3

Contents and Accessories 3

Front Panel 4

Rear Panel 5

Operation 9

System Connection 10

Block Diagram 11

Specifications 12

Service
- Procedures 14
- Schematic 14
- Parts List 14

Variations and Options 14

Warranty 14

Unpacking

Although your NC-900 is neither complicated nor difficult to operate, we recommend you take a few minutes to read this brief manual and familiarize yourself with the important information regarding product features, setup and operation.

As with most electronic devices, we strongly recommend you retain the original packaging. In the unlikely event the product must be returned for servicing, the original packaging (or reasonable equivalent) is required.

Installation

Environment
Never place this product in an environment which could alter its performance or reduce its service life. Such environments usually include high levels of heat, dust, moisture, and vibration.

IMPORTANT SAFETY INSTRUCTIONS

1. Read these instructions.
2. Keep these instructions.
3. Heed all warnings.
4. Follow all instructions.
5. Do not use this apparatus near water.
6. Clean only with dry cloth.
7. Do not block any ventilation openings. Install in accordance with the manufacturer's instructions.
8. Do not install near any heat sources such as radiators, heat registers, stoves, or other apparatus (including amplifiers) that produce heat.
9. Do not defeat the safety purpose of the polarized or grounding-type plug. A polarized plug has two blades with one wider than the other. A grounding type plug has two blades and a third grounding prong. The wide blade or the third prong are provided for your safety. If the provided plug does not fit into your outlet, consult an electrician for replacement of the obsolete outlet.
10. Protect the power cord from being walked on or pinched particularly at plugs, convenience receptacles, and the point where they exit from the apparatus.
11. Only use attachments/accessories specified by the manufacturer.
12. Use only with the cart, stand, tripod, bracket, or table specified by the manufacturer, or sold with the apparatus. When a cart is used, use caution when moving the cart/apparatus combination to avoid injury from tip-over.
13. Unplug this apparatus during lightning storms or when unused for long periods of time.
14. Refer all servicing to qualified service personnel. Servicing is required when the apparatus has been damaged in any way, such as power-supply cord or plug is damaged, liquid has been spilled or objects have fallen into the apparatus, the apparatus has been exposed to rain or moisture, does not operate normally, or has been dropped.



Overview

The NC-900 acts as a converter in network systems that provide an integrated transmission solution via network infrastructure. It provides integrated control software for voice reproduction and BGM control by interworking between complex and wide systems (PA, SR, AV) and provides ideal solution for various spaces such as large industrial complex, hospital, restaurant, and school.

Features

- CONTROLLING ES-6116, PS-6116I, RG-6116, AND EP-6216 THROUGH NETWORK

- TRANSFERRING AUDIO DATA (MP3, PCM, RTSP) THROUGH NETWORK

- SUPPORTING 100/1000 Mbps

- SUPPORTING DHCP, STATIC IP

- SUPPORTING NETWORK BONDING

Contents and Accessories

1. 4P Terminal Block x 1EA
2. Rack Mounting Screw x 4EA
3. User Manual x 1EA

Front Panel

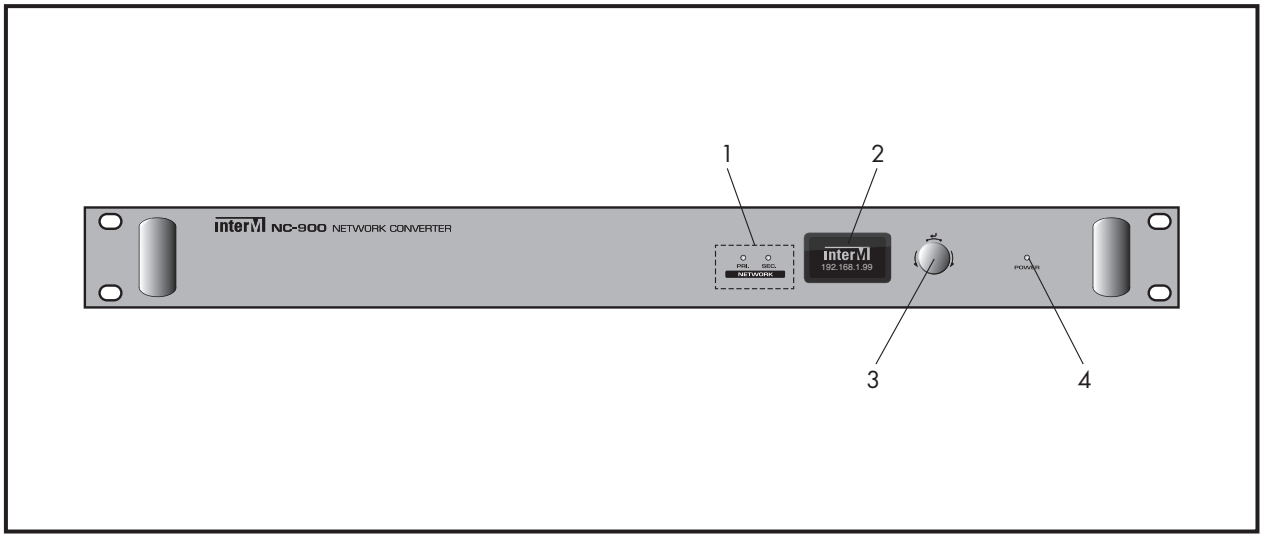

1. **NETWORK STATUS LED**
   The status of network Primary/Secondary operation is displayed

2. **OLED DISPLAY**
   Network status is displayed on OLED DISPLAY.
   - IP Address, Subnet mask, DNS Server, Mac Address Information

3. **DISPLAY CONTROL SWITCH**
   You can check your desired information by rotating the switch.

4. **POWER LED**
   If the device is powered on, green LED is turned on.

Rear Panel

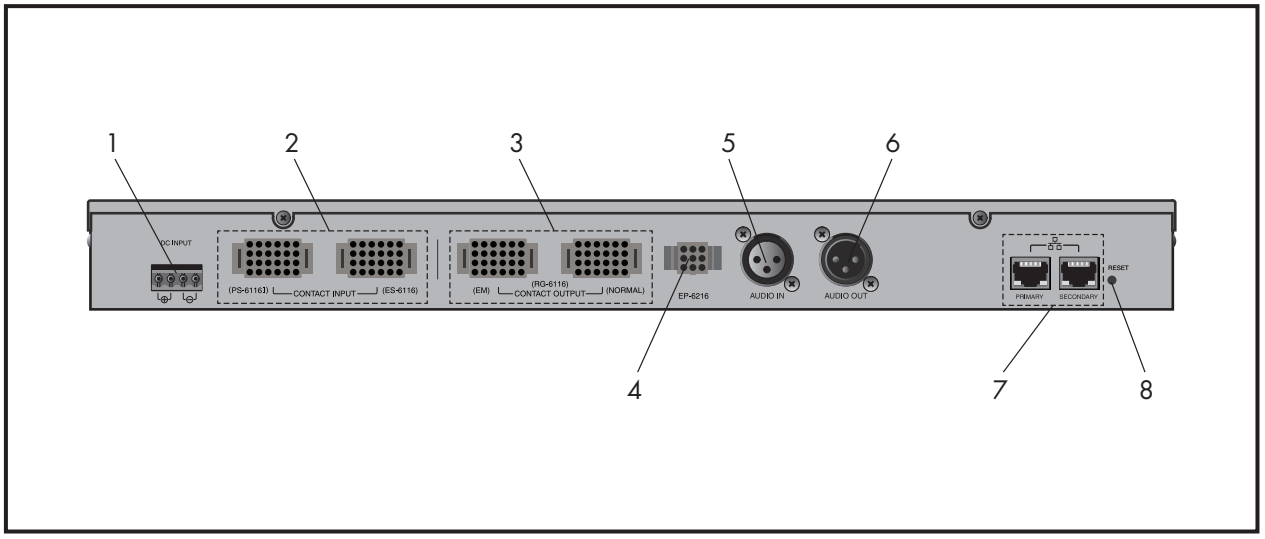

1. DC POWER INPUT TERMINAL

It supplies power to this unit. Power supply is DC 24V.

2. CONTACT CLOSURE INPUT TERMINAL

It is a terminal to connect the contact closure output of ES-6116 and PS-6116I. For more information on how to connect, refer to the following.

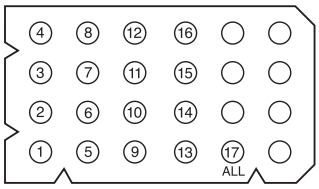

- PS-6116I

PIN	1	2	3	4	5	6	7	8	9	10
SIGNAL	CH1	CH2	CH3	CH4	CH5	CH6	CH7	CH8	CH9	CH10
PIN	11	12	13	14	15	16	17	18	19	20
SIGNAL	CH11	CH12	CH13	CH14	CH15	CH16	ALL	GND	GND	GND

- ES-6116

PIN	1	2	3	4	5	6	7	8	9	10
SIGNAL	CH1	CH2	CH3	CH4	CH5	CH6	CH7	CH8	CH9	CH10
PIN	11	12	13	14	15	16	17	18	19	20
SIGNAL	CH11	CH12	CH13	CH14	CH15	CH16	GND	–	–	–

3. CONTACT CLOSURE OUTPUT TERMINAL

It is a terminal to connect to the contact closure input terminal of RG-6116. Connect to EM RELAY terminal and NORMAL RELAY terminal of RG-6116 respectively. Refer to How to Connect.

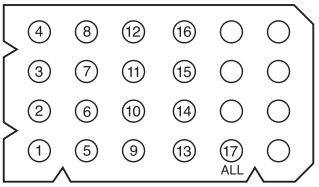

PIN	1	2	3	4	5	6	7	8	9	10
SIGNAL	CH1	CH2	CH3	CH4	CH5	CH6	CH7	CH8	CH9	CH10
PIN	11	12	13	14	15	16	17	18	19	20
SIGNAL	CH11	CH12	CH13	CH14	CH15	CH16	GND	GND	GND	GND

4. EP-6216 CONNECTING TERMINAL

It is a terminal to connect to the MATRIX terminal of EP-6216. For more information on how to connect, refer to the following.

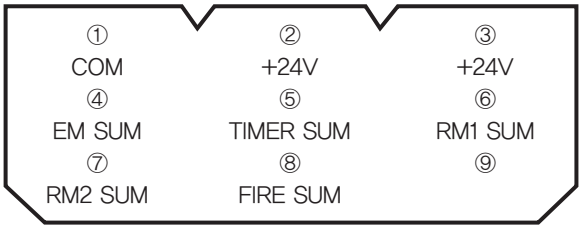

5. AUDIO INPUT TERMINAL

It is a terminal to input audio to be transmitted to the network. Use a balanced cable. If you are using unbalanced cable, refer to the following image to connect the cable.

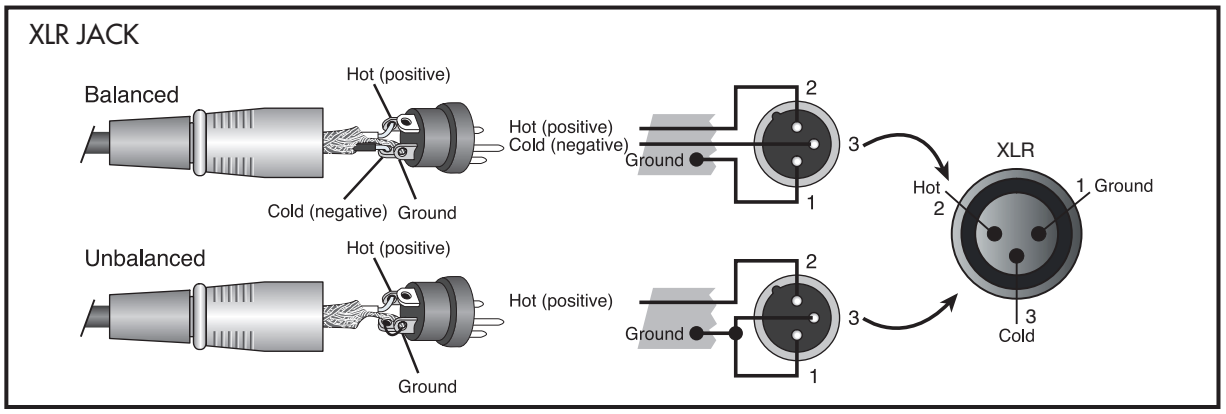

6. AUDIO OUTPUT TERMINAL

It is a terminal to output audio received from the network. Use a balanced cable. If using unbalanced cable, refer to the following image to connect the cable.

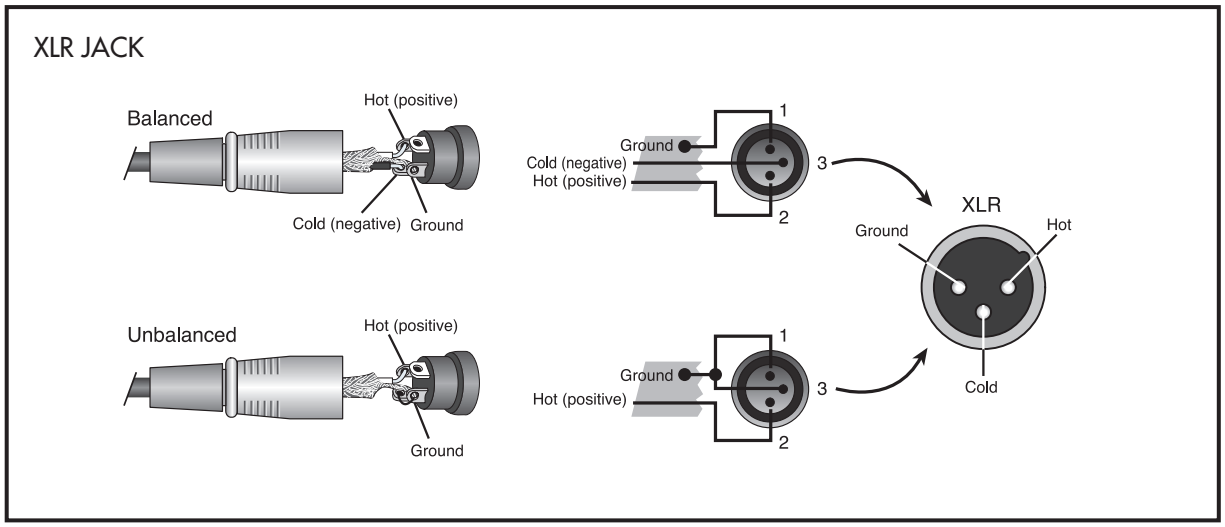

7. NETWORK (PRIMARY & SECONDARY) CONNECTING TERMINAL

It is network connecting terminal (RJ-45) and supports 100/1G Base-T. The maximum communication distance is about 100m.

It is a terminal to connect the device to the network. You can control the broadcasting by using integration software.

※ For more information on how to set up, refer to the integration software manual. Download the manual at home page. (www.inter-m.net)

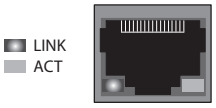

<100 Base-T>		<1G Base-T>	
PIN NO	Function	PIN NO	Function
1	TXN	1	MX(0)+
2	TXP	2	MX(0)-
3	RXN	3	MX(1)+
4	NA	4	MX(1)-
5	NA	5	MX(2)+
6	RXP	6	MX(2)-
7	NA	7	MX(3)+
8	NA	8	MX(3)-

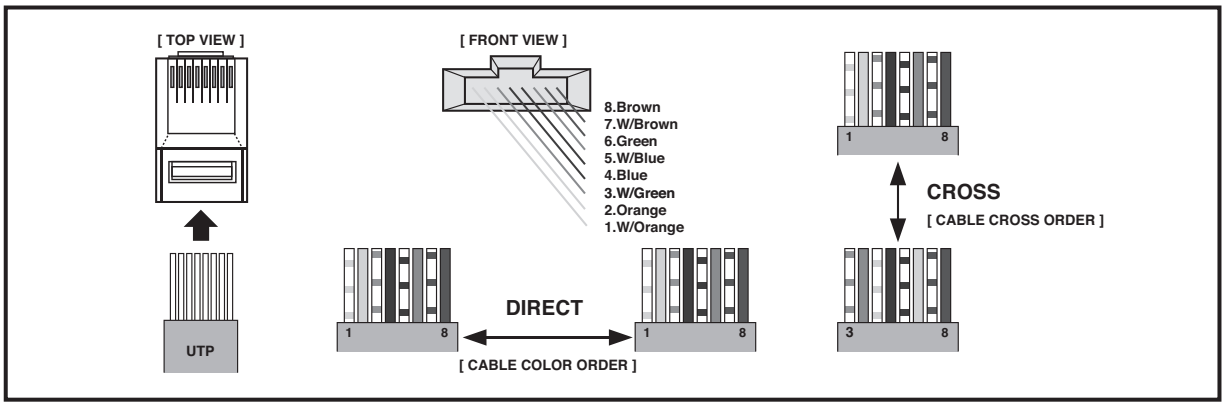

8. RESET SWITCH

Press the switch for more than 10 seconds to reset the settings of the device.

Operation

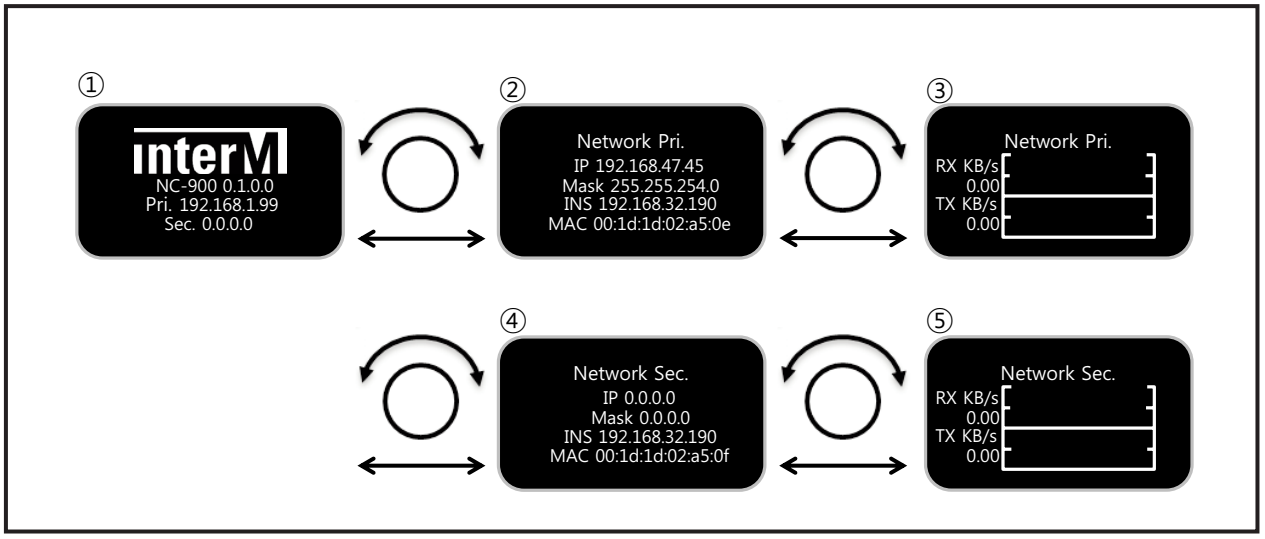

① Standby screen of the device. The model name and primary/secondary network information are displayed.

② In the standby screen, turn the Display Control Switch on front panel to the right to display the Network Primary details (IP Address, Subnet Mask, DNS Server, and Mac Address). In the Network Primary details screen, turn the Display Control Switch on the front panel to the left, the standby screen (model name, primary/secondary network information) is displayed.

③ In the Network Primary details screen, turn the Display Control Switch to the right to display the Network Primary status (RX/TX data rate). In the Network Primary status screen, turn the Display Control Switch to the left to display the Network Primary details (IP Address, Subnet Mask, DNS Server, and Mac Address).

④ In the Network Primary status screen, turn the Display Control Switch to the right to display the Network Secondary details (IP Address, Subnet Mask, DNS Server, and Mac Address). In the Network Secondary details screen, turn the Display Control Switch to the left to display the Network Primary status (RX/tX data rate).

⑤ In the Network Secondary details screen, turn the Display Control Switch to the right to display the Network Secondary status (RX/tX data rate). In the Network Secondary status screen, turn the Display Control Switch to the left to display the Network Secondary details (IP Address, Subnet Mask, DNS Server, and Mac Address).

System Connection

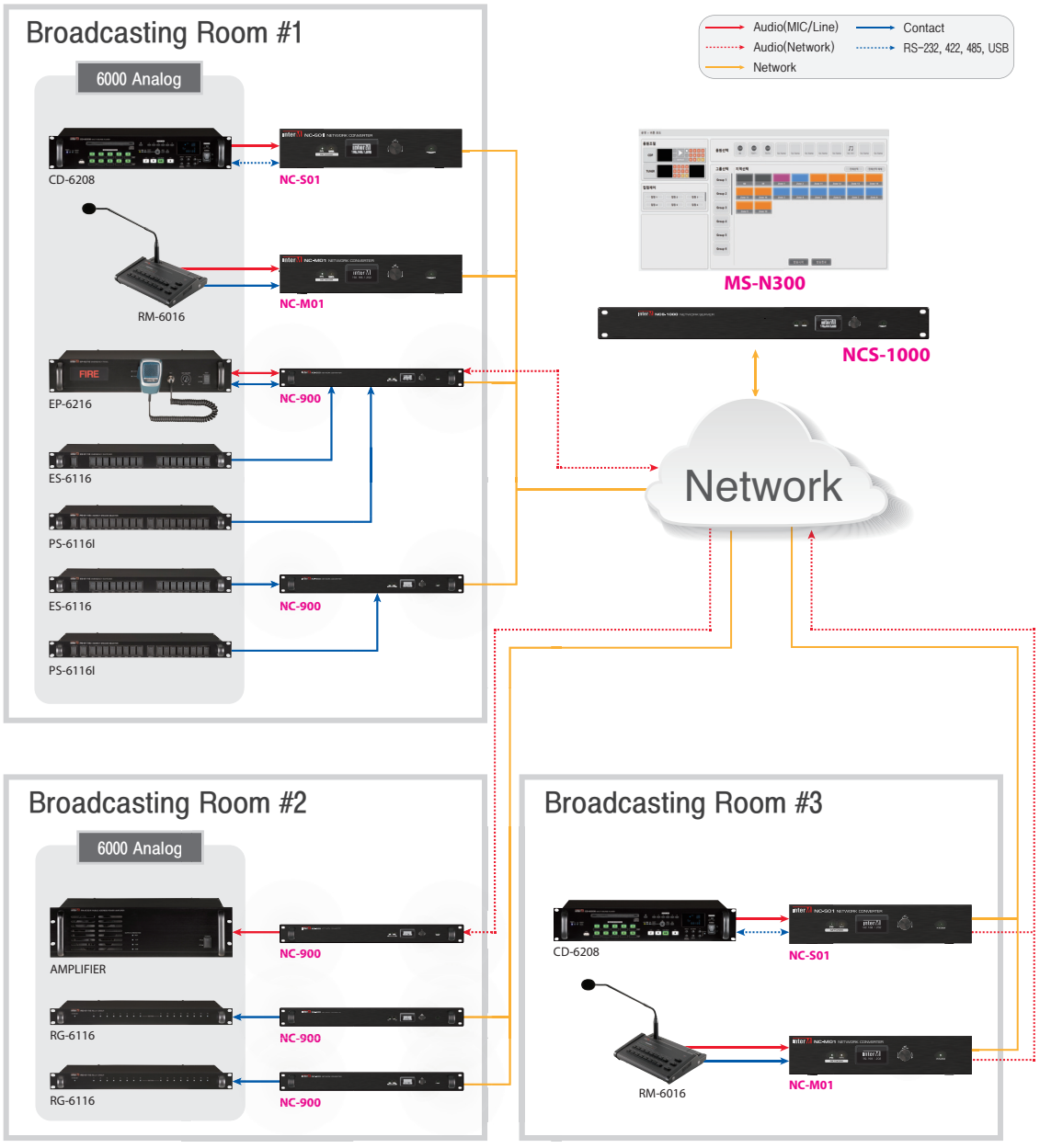

Block Diagram

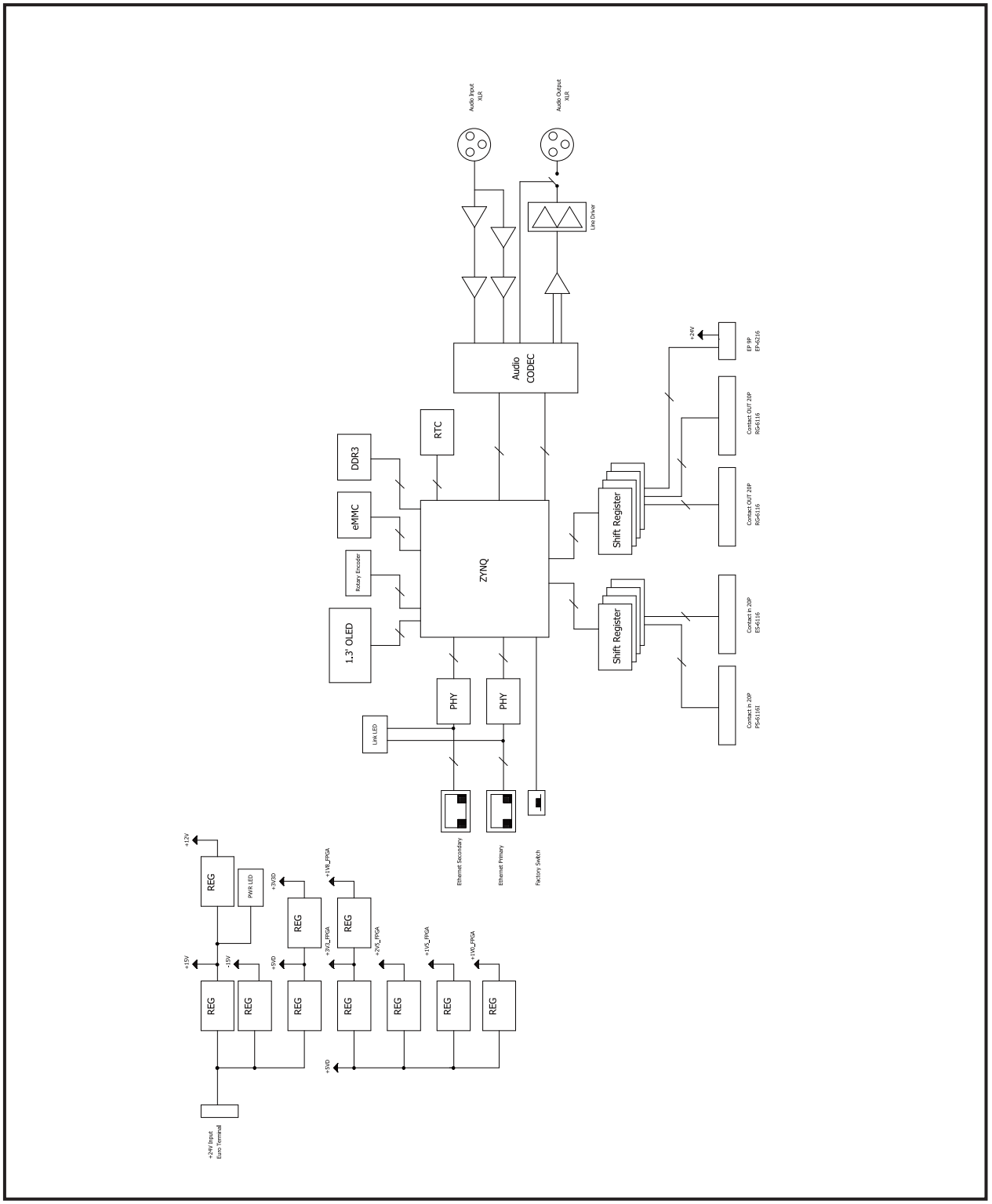

Specifications

		NC-900 6000 Analog Converter
AUDIO	Audio Input	1 Channel
	Audio Output	1 Channel
	Input Sensitivity	0dBV
	Frequency response (0dBV Input, ±3dB)	20Hz~20kHz
	THD+N ratio (20kHz LPF, 0dBV, 1kHz)	Less than 0.1%
	S/N (20kHz LPF, 0dBV, 1kHz)	More than 80dB
	Sampling Frequency	44.1, 48kHz
Contact Closure	Contact Closure Input	16 Channels
Communications	Contact Closure Output	16 Channels
	Network Communications	100/1000 Base-T (RJ-45)
Operating Temperature		0℃~+40℃
Power Source		DC 24V, 350mA
Weight (SET)		3.04kg/6.7lb
Dimensions (SET)		482(W) x 44(H) x 280(D)mm/ 19(W) x 1.7(H) x 11(D)in

* Design and specification are subject to be changed for the improvement of product quality without pre notice.

※ DIMENSIONS

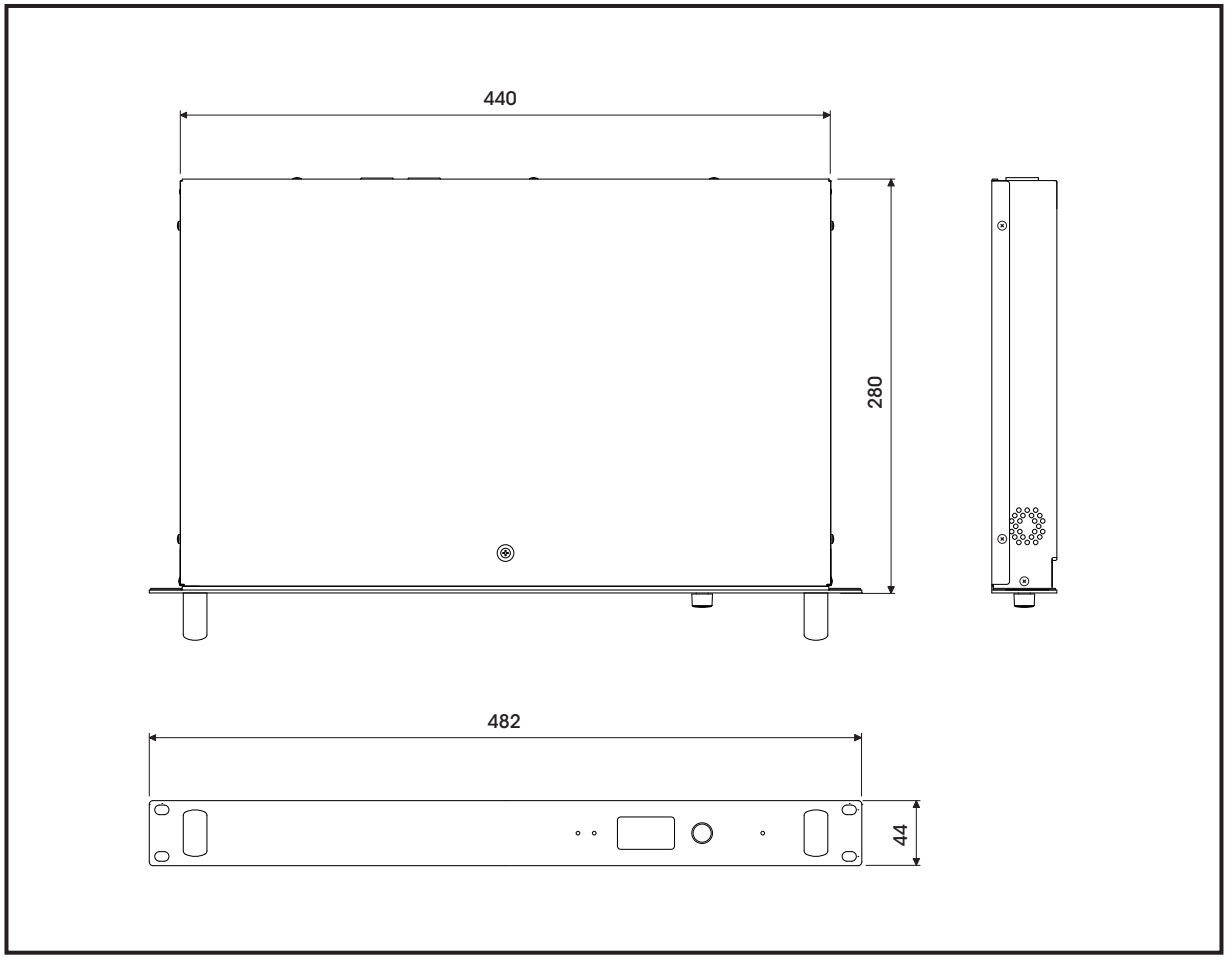

Service

Procedures
Take steps to insure the problem is not related to operator error or other products within the system. Information provided in the troubleshooting portion of this manual may help with this process. Once it is certain that the problem is related to the product contact your warranty provider as described in the warranty section of this manual.

Schematic
A Schematic is available by contacting your warranty provider.

Parts List
A Parts List is available by contacting your warranty provider.

Variations and Options

Variations
Products supplied through legitimate sources are compatible with local AC power requirements.

Options
No optional items are available for this product.

Warranty

Warranty terms and conditions vary by country and may not be the same for all products. Terms and conditions of warranty for a given product may be determined first by locating the appropriate country which the product was purchased in, then by locating the product type.

To obtain specific warranty information and available service locations contact Inter-M directly or the authorized Inter-M Distributor for your specific country or region.

NOTE

Inter-M, Ltd. (Korea) began operations in 1983.

Since then, Inter-M has grown to become one of the largest manufacturers
of professional audio and commercial sound electronics equipment in the world.

Inter-M has gained worldwide recognition for its own branded products,
as well as private label manufacturing of electronics sold under other names (OEM).

The company is no longer just a Korean company, but rather a global company
that is truly international in scope, with factories and offices in Korea and China,
and sales and marketing operations located in Japan, Europe, and the U.S.A.

With more than 850 employees around the globe,
Inter-M is well-poised for further growth and expansion.

Inter-M Americas, INC.
5666 CORPORATE AVE. CYPRESS, CA 90630
TEL : +1-714-828-2200, FAX : +1-714-828-2210
Home Page : http://www.inter-m.net, E-mail : info@inter-m.net

Inter-M Corporation
SEOUL OFFICE : 719, DOBONG-RO, DOBONG-GU, SEOUL, KOREA
TEL : +82-2-2289-8140~8, FAX : +82-2-2289-8149
Home Page : http://www.inter-m.com, E-mail : overseas@inter-m.com

MADE IN KOREA
July 2021 154219