Operation Manual

Digital Power Amplifier

DPA-50E



* Rack mount products in the Western Hemisphere(North America, South America, and the Caribbean) do not have handles installed due to customer preference.

interM

Welcome

A personal welcome to you from the management and employees of Inter-M

All of the co-workers here at Inter-M are dedicated to providing excellent products with inherently good value, and we are delighted you have purchased one of our products.

We sincerely trust this product will provide years of satisfactory service, but if anything is not to your complete satisfaction, we will endeavor to make things right.

Welcome to Inter-M, and thank you for becoming part of our worldwide extended family!





This symbol is intended to alert the user to the presence of uninsulated “dangerous voltage” within the product’s enclosure that may be of sufficient magnitude to constitute a risk of electric shock to persons.



This symbol is intended to alert the user to the presence of important operation and maintenance (servicing) instructions in the literature accompanying the appliance.

Caution: To prevent electric shock do not use this (polarized) plug with an extension cord, receptacle or other outlet unless the blades can be fully inserted to prevent blade exposure.

Attentions: Pour prévenir les chocs électriques ne pas utiliser cette fiche polarisée avec un prolongateur, une prise de courant on une autre sortie de courant, sauf si les lames peuvent étre insérées à fond sans en laisser aucune partie à découvert.
Pour deconnecter completement làppareil du reseau dàlimentation. deconnecter le cordon dàlimentation de la prise murale.
Laprise du reseau dàlimentation doit demeurer aisement accessible.

WARNING

To prevent fire or shock hazard, do not expose the unit to rain or moisture.

*WARNING FOR YOUR PROTECTION PLEASE READ THE FOLLOWING-WATER AND MOISTURE: Unit should not be used near water(e.g. near a bathtub, washbowl, kitchen sink, laundry tub, in a wet basement, or near a swimming pool, etc). Care should be taken so than objects do not fall and liquids are not spilled into the enclosure through openings.
*CLASS 2 WIRING (Adjacent to speaker terminal): The speaker output of this apparatus can exceed 10 Watts and could be a shock injury. Connection to speakers should be performed by a skilled person.
*Do not install this equipment in a confined space such as a book case or similar unit.
*This apparatus shall not be exposed to dripping or splashing and no objects filled with liquids, such vases, shall be placed on the apparatus.
*This apparatus shall be connected to a mains socket outlet with a protective earthing connection.
*It has heed to be easy to disconnect the device. To disconnect the device from power, separate AC input cable from inlet or unplug the AC Cord.

CAUTION
*These servicing instructions are for use by qualified service personnel only. To reduce the risk of electric shock, do not perform any servicing other than that contained in the operating instructions unless you are qualified to do so.

NOTE
*This equipment has been tested and found to comply with the limits for a Class A digital device, pursuant to Part 15 of the FCC Rules. These limits are designed to provide reasonable protection against harmful interference when the equipment is operated in a commercial environment. This equipment generates, uses, and can radiate radio frequency energy and, if not installed and used in accordance with the instruction manual, may cause harmful interference to radio communications. Operation of this equipment in a residential area is likely to cause harmful interference in which case the user will be required to correct the interference at his own expense.

Contents

Unpacking 2

Installation
- Environment 2
- Important Safety Instructions 2

Features 3

Contents and Accessories 3

Front Panel 4

Rear Panel 6

Installation Precautions 9

Applications 10

Block Diagram 11

Specifications 12

Service
- Procedures 14
- Schematic 14
- Parts List 14

Variations and Options 14

Warranty 14

Unpacking

Although your DPA-50E is neither complicated nor difficult to operate, we recommend you take a few minutes to read this brief manual and familiarize yourself with the important information regarding product features, setup and operation.

As with most electronic devices, we strongly recommend you retain the original packaging. In the unlikely event the product must be returned for servicing, the original packaging (or reasonable equivalent) is required.

Installation

Environment
Never place this product in an environment which could alter its performance or reduce its service life. Such environments usually include high levels of heat, dust, moisture, and vibration.

IMPORTANT SAFETY INSTRUCTIONS

1. Read these instructions.
2. Keep these instructions.
3. Heed all warnings.
4. Follow all instructions.
5. Do not use this apparatus near water.
6. Clean only with dry cloth.
7. Do not block any ventilation openings. Install in accordance with the manufacturer's instructions.
8. Do not install near any heat sources such as radiators, heat registers, stoves, or other apparatus (including amplifiers) that produce heat.
9. Do not defeat the safety purpose of the polarized or grounding-type plug. A polarized plug has two blades with one wider than the other. A grounding type plug has two blades and a third grounding prong. The wide blade or the third prong are provided for your safety. If the provided plug does not fit into your outlet, consult an electrician for replacement of the obsolete outlet.
10. Protect the power cord from being walked on or pinched particularly at plugs, convenience receptacles, and the point where they exit from the apparatus.
11. Only use attachments/accessories specified by the manufacturer.
12. Use only with the cart, stand, tripod, bracket, or table specified by the manufacturer, or sold with the apparatus. When a cart is used, use caution when moving the cart/apparatus combination to avoid injury from tip-over.
13. Unplug this apparatus during lightning storms or when unused for long periods of time.
14. Refer all servicing to qualified service personnel. Servicing is required when the apparatus has been damaged in any way, such as power-supply cord or plug is damaged, liquid has been spilled or objects have fallen into the apparatus, the apparatus has been exposed to rain or moisture, does not operate normally, or has been dropped.



Features

- HIGH PERFORMANCE 8 CHANNEL CLASS-D POWER AMPLIFIER
High performance Class-D Professional Amplifier has up to 50W 8CH (50W×8) power output.

- EMERGENCY POWER BACK UP (DC 24V) CAPABILITY
The unit operates on a DC 24V battery power supply for emergency back up without UPS.

- SMPS (SWITCHING MODE POWER SUPPLY) POWER SCHEME
High efficient, light weight SMPS power system is utilized.

- RATED OUTPUT POWER VIA DC BACKUP SUPPLY
Output power can be maintained as AC power when DC 24V power supplied.

- POWERFUL AND DETAILED SOUND QUALITY
High S/N ratio and Low THD reproduces powerful and detailed sound.

- COMPLETE PROTECTION CIRCUITS
Complete circuit protection is activated in case of amplifier overheating, output shorting, overload, over power and DC output.

- OPERATION INDICATOR LED
LED display to check the operating status (AC, DC, STBY, POWER, SIG, CLIP, PROT)

- BALANCED INPUT
This connection is used to ensure the lowest noise operation which eliminates the common noise from the cable.

- PRIORITY INPUT
PGM is interrupted and over ridden by the Priority input, when a contact closure is received on the Priority input terminal. This is Ideal for Emergency message broadcasting applications.

- SIGNAL LINK
Signals input to the CH1 can be sent to the other channels(CH2~CH8). Received signals can be output from the same channels.

Contents and Accessories

1. Power Cord x 1
2. 6P Terminal Block x 14
3. Screw for Rack Mount x 4
4. Rear Bracket x 4
5. Operation Manual x 1

Front Panel

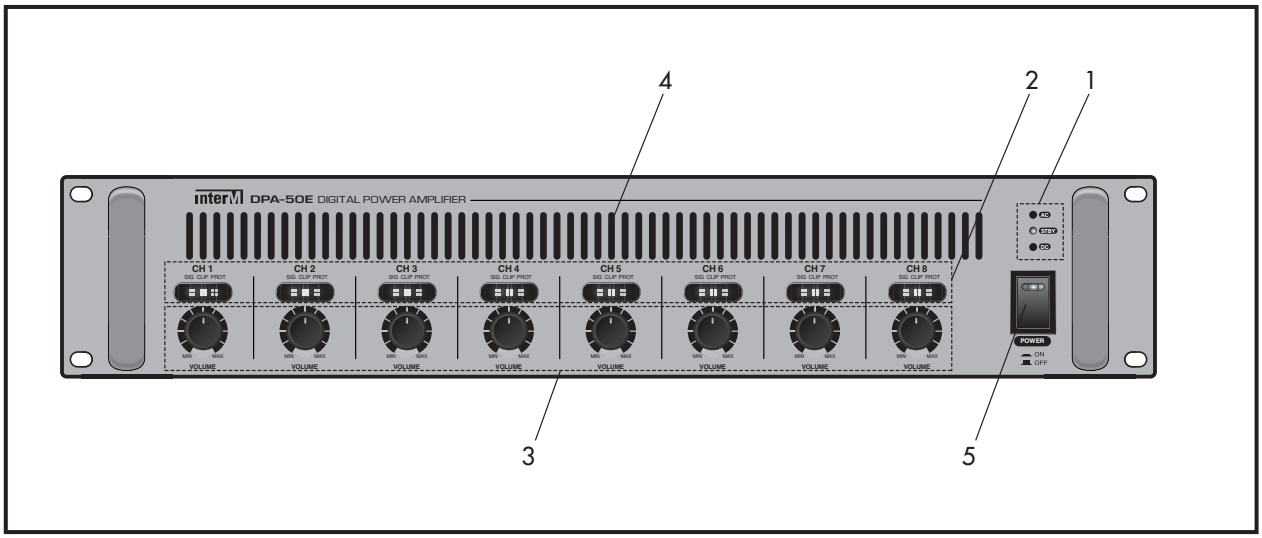

1. AC, STBY, DC LED

When Power switch is on, AC or DC LED will illuminate depending on input Power source. When Power switch is off, STBY LED will turn on.

※ NOTE: During operation of DC, amplifier is keep going to work even if the switch of power is turned off.

	Power SW	Power LED	AC LED	STBY LED	DC LED
AC/DC	SW ON	ON	ON	OFF	OFF
	SW OFF	OFF	OFF	ON	OFF
AC only	SW ON	ON	ON	OFF	OFF
	SW OFF	OFF	OFF	ON	OFF
DC only	SW ON	ON	OFF	OFF	ON
	SW OFF	ON	OFF	OFF	ON

2. OUTPUT LEVEL INDICATOR (CH1 ~ CH8)

Indicator display of unit's output level status.

SIG LED: Green, CLIP LED: Orange, PROT LED: Red

※ Note: If CLIP LED is lit, sound output is distorted. Reduce the volume level.

PROT LED is turned on under below circumstances.

1. PROT LED from CH1 to CH8 will be turned on simultaneously when there isa rise of the internal temperature of the DPA-50E or when there are excessive simultaneous inputs to the 8 channels.
2. PROT LED of the corresponding channels and grouped PROT LED will be turned on at the same time when a terminal is misconnected or excessively input.

The protection circuit is grouped as CH1/CH2, CH3/CH4, CH5/CH6 and CH7/CH8.
For instance, if speaker output terminal of CH1 is misconnected or excessively input, PROT LEDs of CH1 and CH2 are turned on.

3. VOLUME CONTROL
Volume adjustments are made. Turn clockwise to increase the volume level.

4. FAN VENTS
The air circulation passage to prevent overheating of the device, please do not obstruct the flow as air flows from front to back.

5. POWER SWITCH
Push on/off switch. When Power switch is on, BLUE LED will illuminate.

Rear Panel

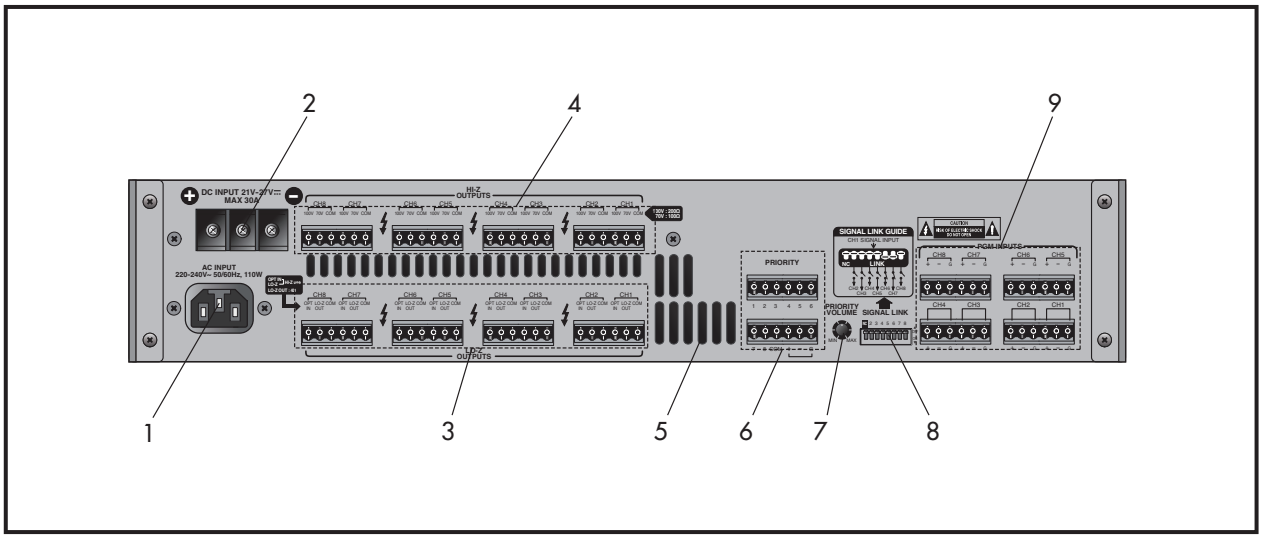

1. AC INPUT

Connect the power cable which is supplied with the unit. Do not bend, pull, twist, heat and cut by force. It may cause electric shock.

2. DC TERMINAL

This is emergency DC terminal (DC 24V). When something happens to AC power, DC power automatically operates. Input provides power to the device regardless of power switch.
Please check voltage and +, - polarity.

3. LOW IMPEDANCE OUTPUT TERMINAL

These are the 4 ohm speaker output terminals. Turn off the speaker first before using them. (Turn to page 7, Connecting Speakers section to find more about how-to-connect.)

4. HIGH IMPEDANCE OUTPUT TERMINAL

These are the 70V/100V output terminals. Connect OPT IN of LO-Z OUTPUTS to LO-Z OUT and connect in accordance with the voltage power. (Turn to page 7, ※Connecting Speakers section to find more about how-to-connect.)

※ **Connecting Speakers**

Before connecting speakers to the unit, be sure to disconnect the AC power cable.
Make certain that the total impedance is not less than the rated impedance indicated.

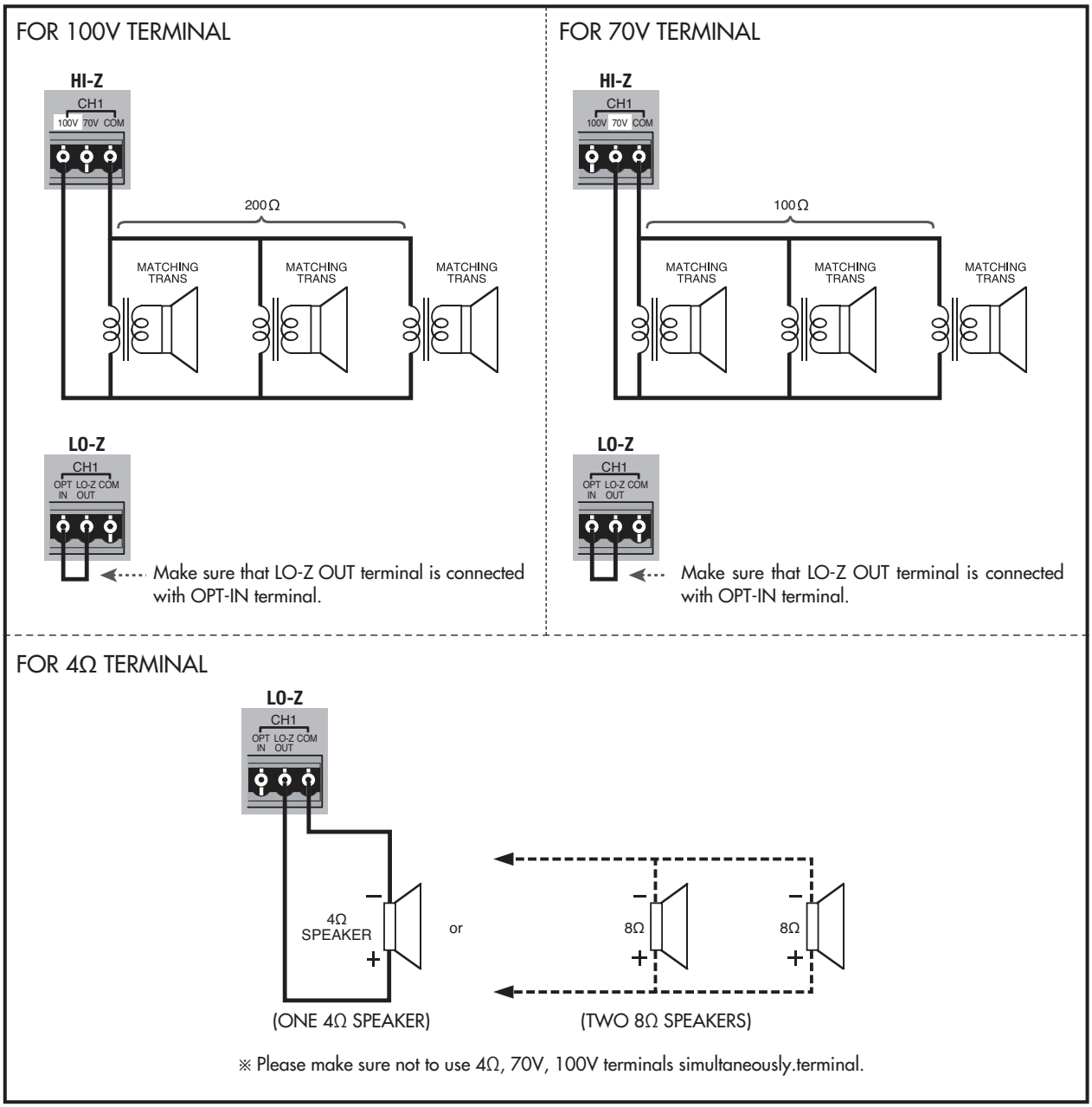

※ Warning: 1. Make certain that the total impedance is not less than the rated impedance indicated.
2. Please make sure not to use 4Ω, 70V, 100V terminals simultaneously.
3. If you're just dealing with the high impedance terminal(100Ω, 200Ω), then make sure that LO-Z OUT terminal is connected with OPT-IN terminal.
4. Do not close the speaker output line to the signal input line.

5. FAN VENTS

Air flow is front to back.

※ Caution: DO NOT block front or rear air vents.

6. PRIORITY INPUT AND CONTACT CLOSURE

Each amplifier module has 2 audio inputs. The PGM input and PRIORITY input. PGM input is interrupted and over ridden by the PRIORITY input when a contact closure is received on the PRI select terminal. This is Ideal for Emergency message broadcasting applications. Please refer to the following picture about the suitable cables.

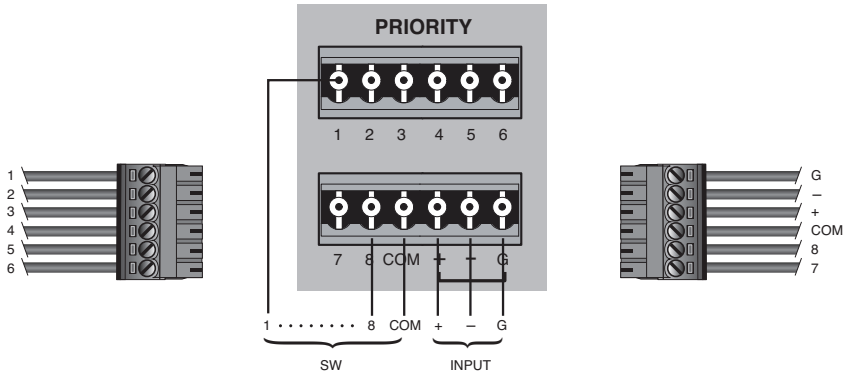

7. PRIORITY VOLUME CONTROL

It is a volume control of PRIORITY INPUT signal. This control can adjust PRIORITY INPUT signal used as emergency broadcasting. Turn clockwise to turn up the signal level and counterclockwise to lower the signal level.

※ It is mainly for priority broadcasting so, don't make the VOLUME level too low.

8. SIGNAL LINK SWITCH

Turn ON the switches of each channel to link the same input signal of CH1 to the same channel.

For instance, when the switch of the CH2, CH3 is turned ON, signals input to the CH1 is output to CH2, CH3 simultaneously. Unswitched channels output received signals.

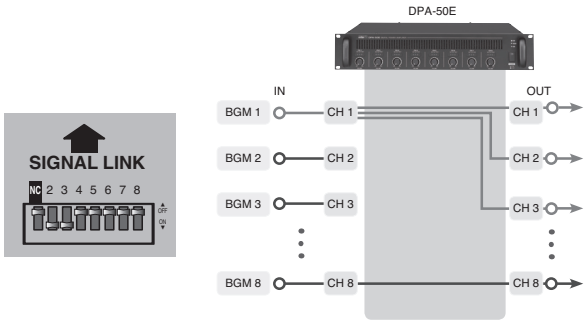

9. PGM INPUT TERMINAL

Terminal block connector accepts the source input. Please refer to the following picture about the suitable cables.

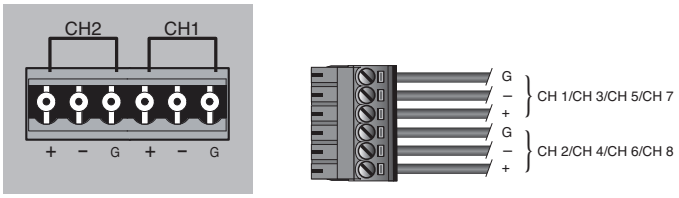

Installation Precautions

1. This unit employs front air intake, rear exhaust forced air cooling, therefore, when installing in portable rack, leave the rear opening clear of obstructions.

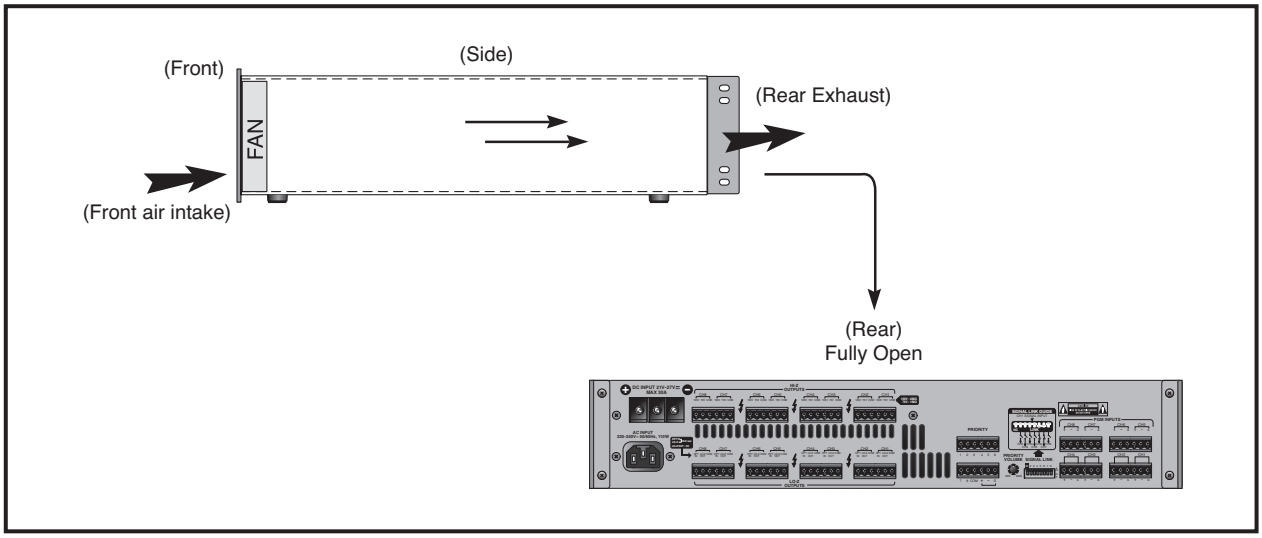

2. When using power amplifier, please install the unit where there is no airflow block to the heat sink.

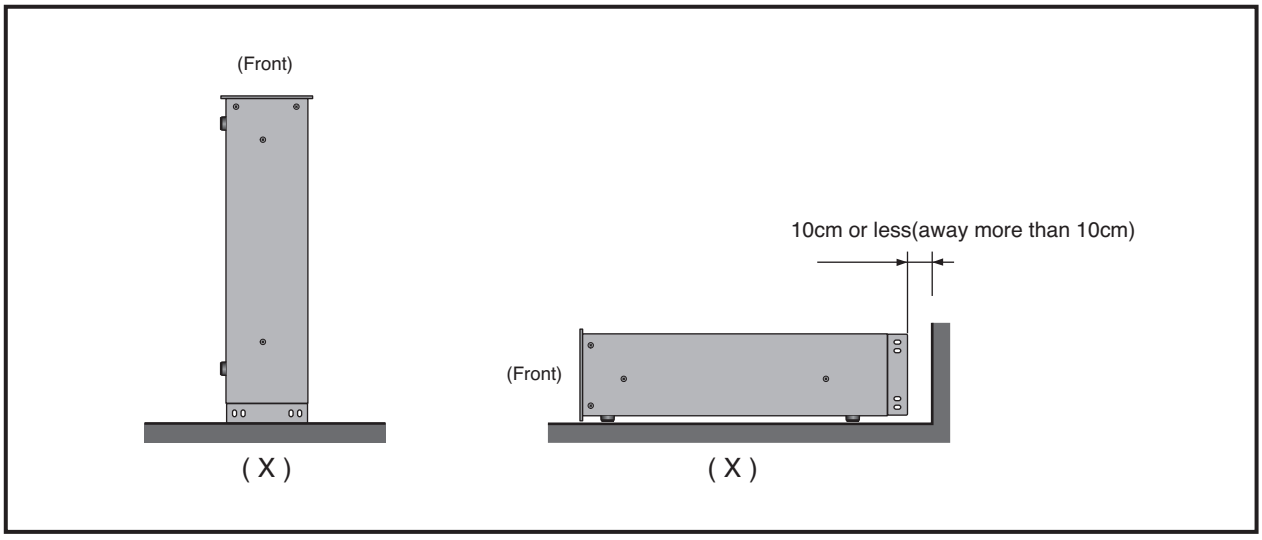

Applications

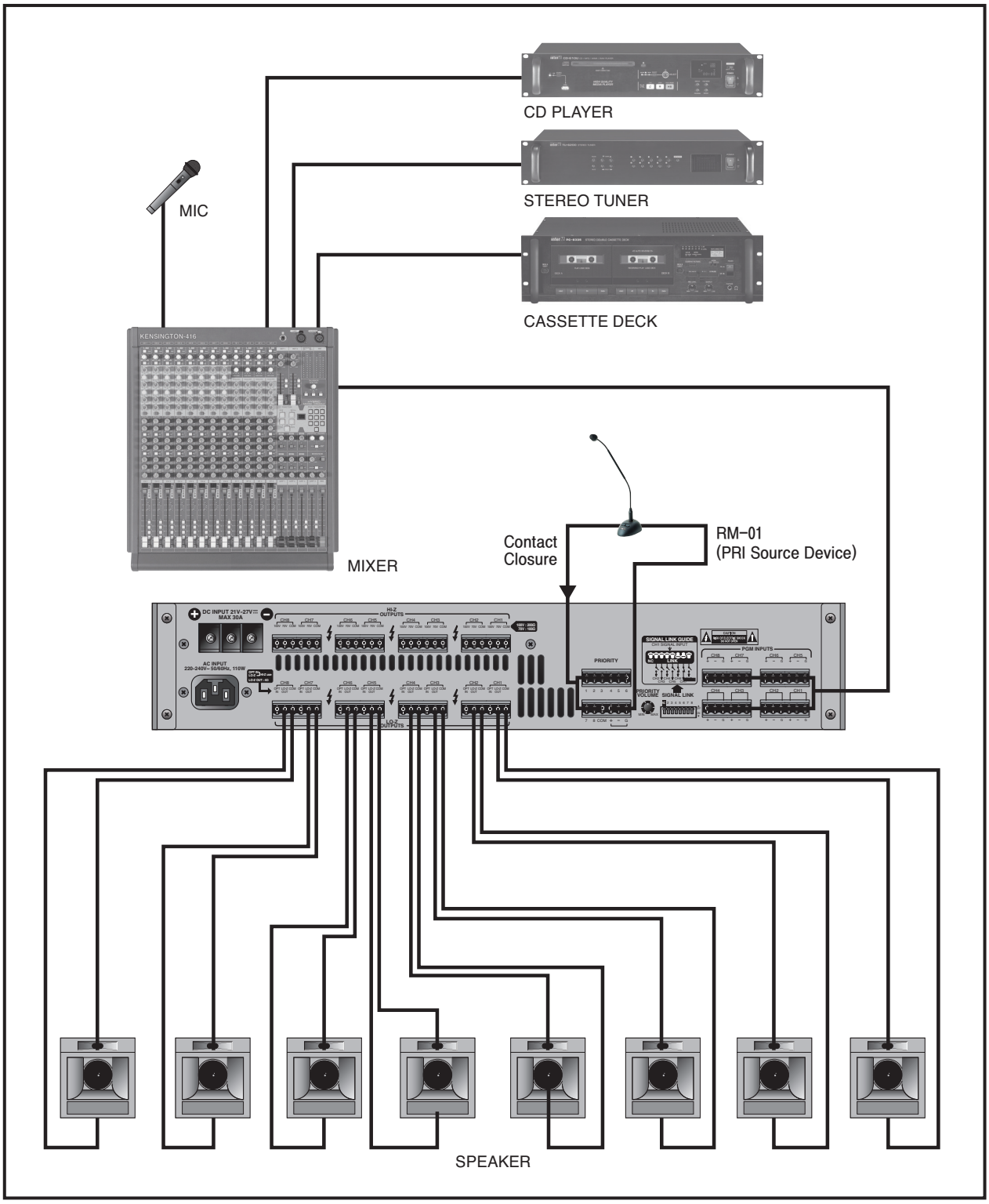

Block Diagram

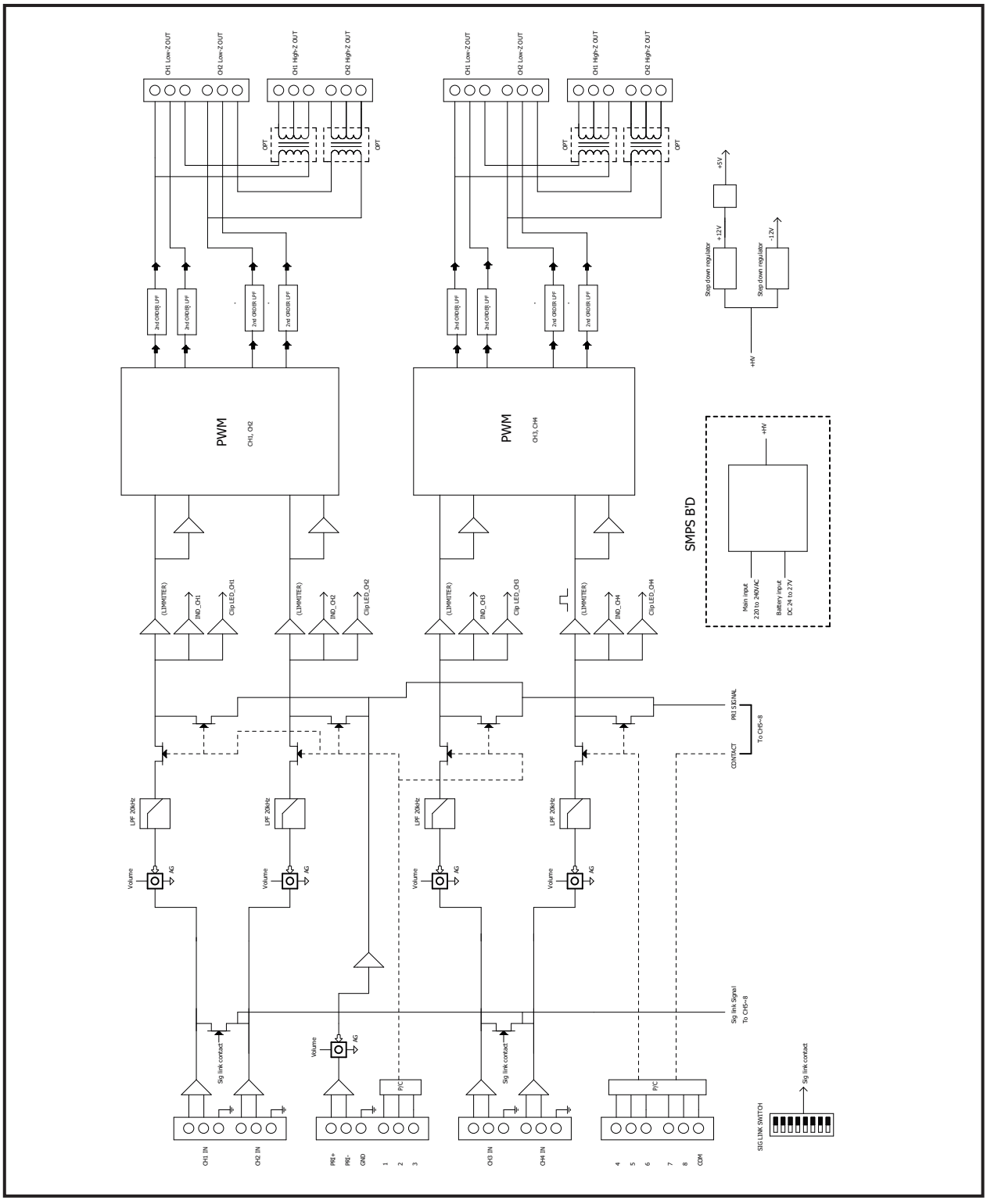

Specifications

	DPA-50E
Rated Output Power	60W ×8CH (4Ω), 50W x 8CH (70V/100V)
Output Level/Impedance	100V/200Ω
	70V/100Ω
	15.5V/4Ω
Input Sensitivity	1V/10kΩ
T.H.D (AES17, Rated Power)	Less than 0.1%
S/N (20kHz LPF)	Better than 90dB
Frequency Response (1W, ±3dB)	80Hz~18kHz
Operating Temperature	-10°C ~ 40°C
Power Source	AC 220-240V, 50/60Hz, DC 24V
Power Consumption	110W
Weight (Set)	11.3kg/24.9lb
Dimensions (Set)	482(W) × 88(H) × 420(D)mm/18.98(W) x 3.46(H) x 16.53(D)in

* Design and specification are subject to be changed for the improvement of product quality without pre notice.

※ DIMENSIONS

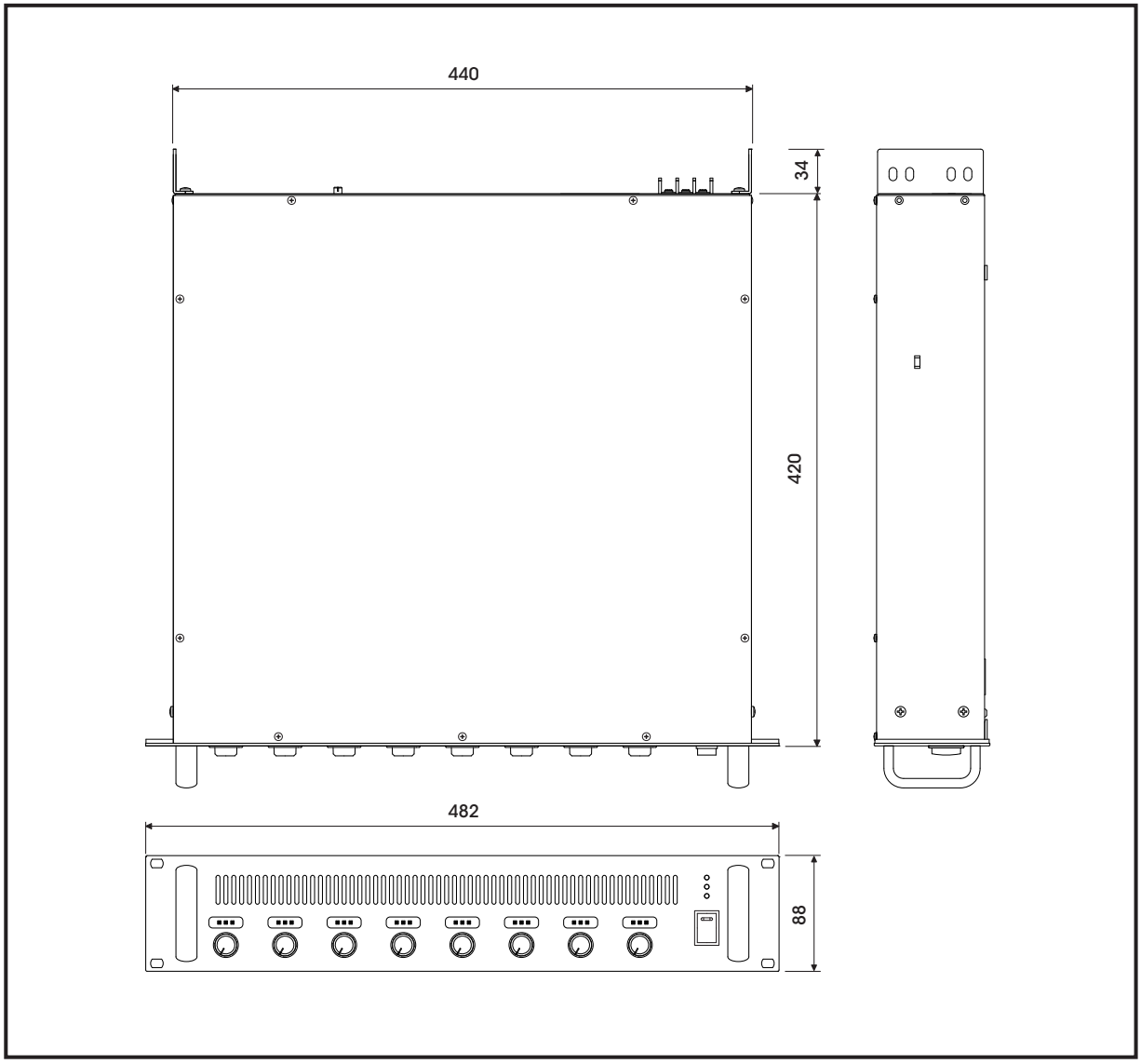

Service

Procedures
Take steps to insure the problem is not related to operator error or other products within the system. Information provided in the troubleshooting portion of this manual may help with this process. Once it is certain that the problem is related to the product contact your warranty provider as described in the warranty section of this manual.

Schematic
A Schematic is available by contacting your warranty provider.

Parts List
A Parts List is available by contacting your warranty provider.

Variations and Options

Variations
Products supplied through legitimate sources are compatible with local AC power requirements.

Options
No optional items are available for this product.

Warranty

Warranty terms and conditions vary by country and may not be the same for all products. Terms and conditions of warranty for a given product may be determined first by locating the appropriate country which the product was purchased in, then by locating the product type.

To obtain specific warranty information and available service locations contact Inter-M directly or the authorized Inter-M Distributor for your specific country or region.

NOTE

Inter-M, Ltd. (Korea) began operations in 1983.

Since then, Inter-M has grown to become one of the largest manufacturers
of professional audio and commercial sound electronics equipment in the world.

Inter-M has gained worldwide recognition for its own branded products,
as well as private label manufacturing of electronics sold under other names (OEM).

The company is no longer just a Korean company, but rather a global company
that is truly international in scope, with factories and offices in Korea and China,
and sales and marketing operations located in Japan, Europe, and the U.S.A.

With more than 850 employees around the globe,
Inter-M is well-poised for further growth and expansion.

Inter-M Americas, INC.
5666 CORPORATE AVE. CYPRESS, CA 90630
TEL : +1-714-828-2200, FAX : +1-714-828-2210
Home Page : http://www.inter-m.net, E-mail : info@inter-m.net

Inter-M Corporation
SEOUL OFFICE : 719, DOBONG-RO, DOBONG-GU, SEOUL, KOREA
TEL : +82-2-2289-8140~8, FAX : +82-2-2289-8149
Home Page : http://www.inter-m.com, E-mail : overseas@inter-m.com

MADE IN KOREA
June 2021 154218