8CH Digital Power Amplifier

DPA-50E



interM



DPA-50E
8CH Digital Power Amplifier

Development Background

Inter-M, with wide range of commercial amplifier, has developed 1200 W high-power digital amplifier first in the market and been awarded as best patent in Korean domestic market in 2015 with the product. DPA-50E is made based on this technology. It is 50 W×8CH(100V, 70V) multi-channel amplifier which outputs 60 W×8CH(4 Ω) and 30 W×8CH(8 Ω). In this way, the DPA-50E can both be used as professional and commercial audio. The amplifier is crucial to build dispersion control system such as NPX and operate it effectively. DPA-50E is essential to build dispersion control system effectively with NPX system of Inter-M. Designed not only for smaller venues for individual uses but also for larger venues such as hotels, training centers, schools and conference halls as it can broadcast different sound sources to each different zones and control separately by channels. Make the most out of DPA-50E of Inter-M!

FEATURES

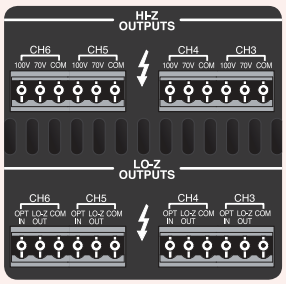

Optimized output for both PA&SR use

DPA-50E has OPT applied HI-Z(100 V, 70 V) output terminal and OPTLESS applied LO-Z output terminal individually. HI-Z terminal can be useful with commercial use as it requires distant transmission and parallel connection. LO-Z terminal is particularly for professional use that requires high quality sound transmission in close range between the speaker and the amplifier. DPA-50E fits in various dispersion system application as it both suits for commercial and professional use.

50 W×8CH multi-channel amplifier

Previous amplifier sends one input sound source to all output en bloc but DPA-50E is a multi-channel amplifier that can broadcast different sound sources to each 8 channels and control them by zones. In other words, it can play BGM in cafeteria while broadcasting microphones in the headquarters. This can be a very useful feature from smaller venues such as cafes and stores to larger venues like schools and department stores.

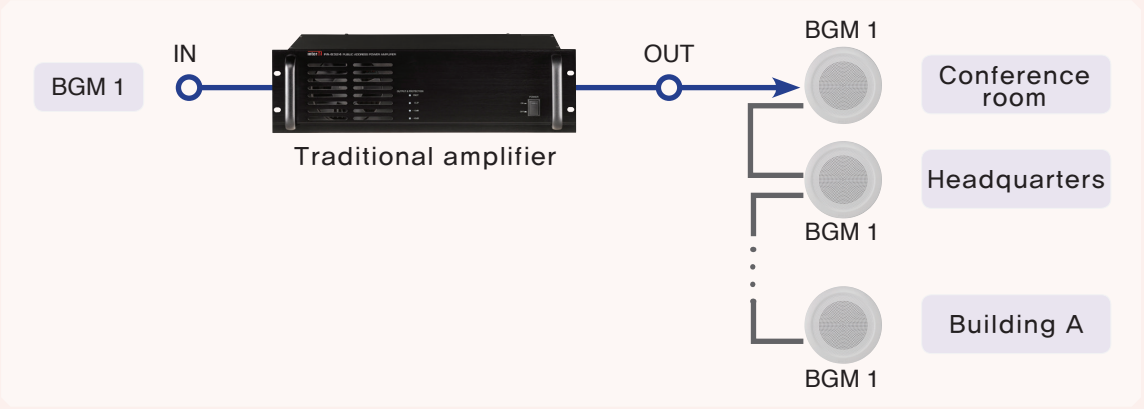

〈Traditional amplifier〉

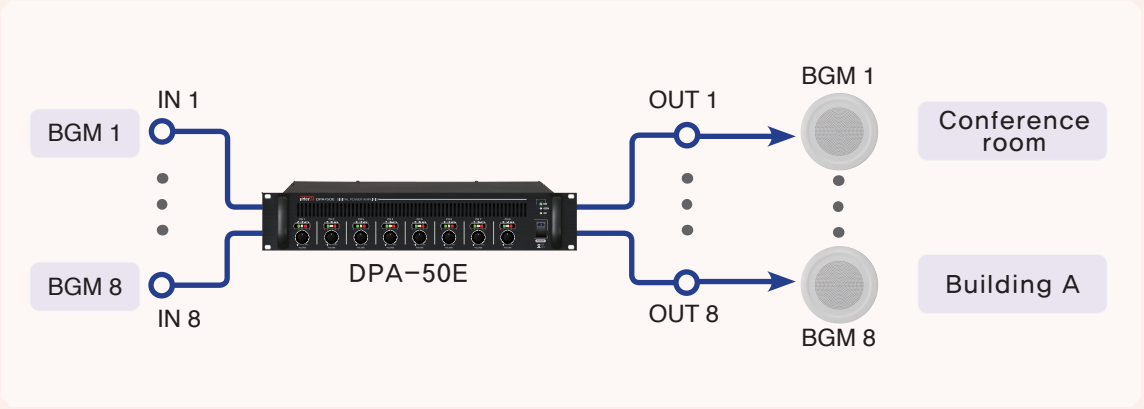

〈DPA-50E〉

FEATURES

Signal Link function for multi input

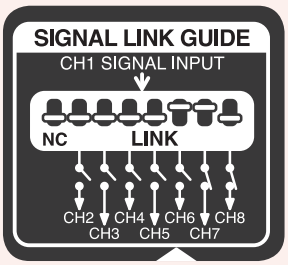

With the Signal Link Switch displayed on the left side, send sound sources input to CH 1 to linked channels at the same time. For instance, switch on CH 2 and CH 1 input sound source is output to CH 3 simultaneously. Use the Signal Link function to utilize DPA-50E as you wish.
(※ Channels that are switched off output inserted sound sources to corresponding channels)

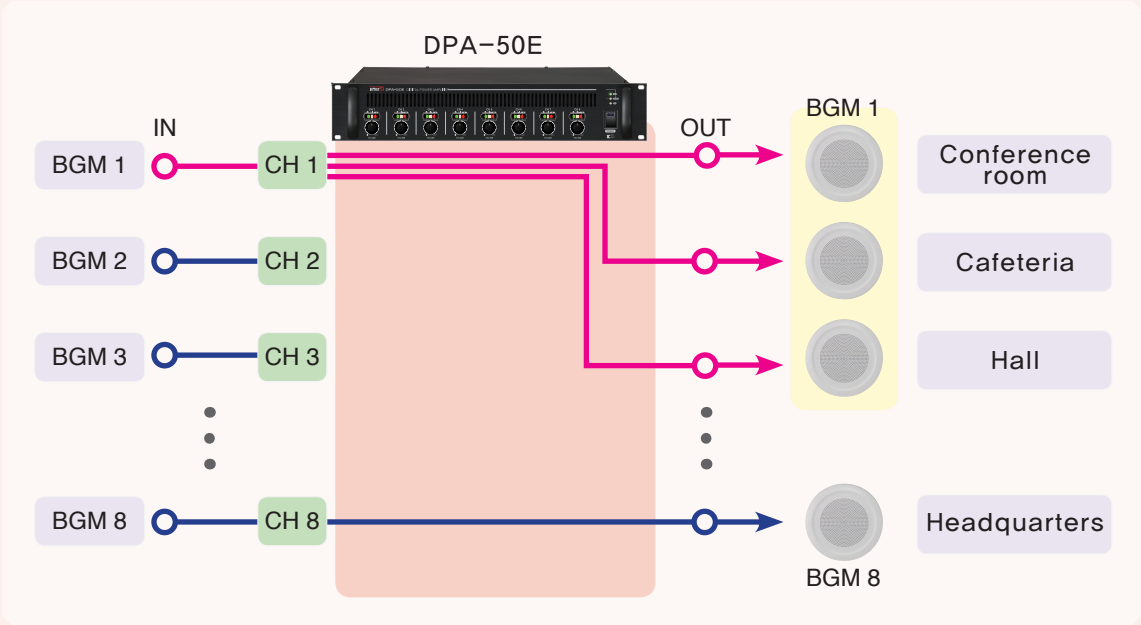

〈Signal Link Switch Setting Example〉

Secure operation through AC/DC dual power

DPA-50E is AC/DC dual powered and is DC 24 V provided with the battery when urgent situation such as blackout occurs. DC power is emergency power that operates regardless of ON/OFF of the power switch. It is automatically switched to AC power even when DC power is operating if AC power is working in order.

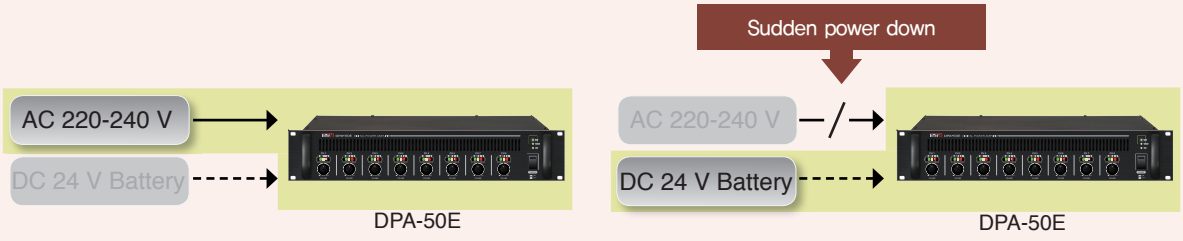

〈When with electricity〉 〈When AC power is blocked〉

FEATURES

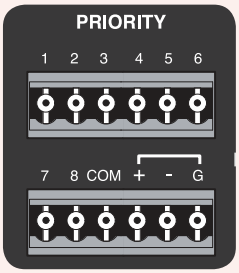

Priority Function

Automatic emergency broadcasting is available using priority function of DPA-50E in emergency situations. When contact closure is inserted to PRIORITY terminal on the rear panel, signals input to the PRIORITY terminal are output before the ones entered to PGM INPUT terminal.

※ PGM : Programmable



LED Indicators

The backlit LED enables to monitor AC/DC power, STBY status, SIG(-30 dB) output level of each channel, Clip and Protect status. Also, with the volumes of each channel on the front panel, separate volume control is possible.

Stability guaranteed with perfect protection circuit

Stability of the device is guaranteed with OVP(Over-Voltage Protection) function which perceives and blocks when in/output voltage is higher or lower than the settled voltage range, UVP(Under-Voltage Protection) and overcurrent protection function.



FRONT/REAR PANEL

FRONT PANEL



1. Power switch, AC/DC/STBY indicating LED
2. Level signal display
3. Volume control
4. Cooling vents

REAR PANEL

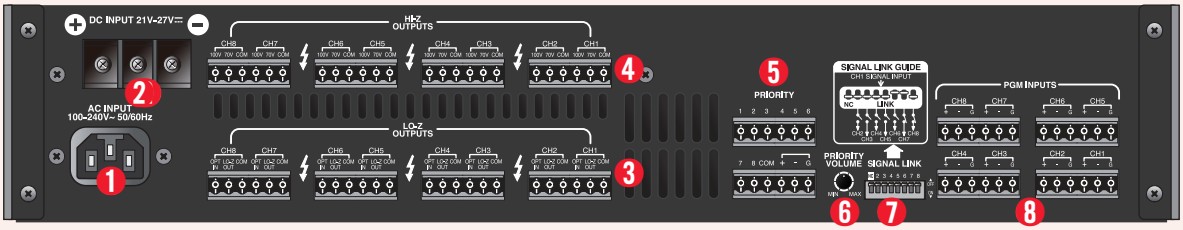

1. AC power input
2. DC power input
3. Low impedance speaker output terminal
4. High impedance speaker output terminal
5. PRIORITY signal and contact closure terminal
6. PRIORITY volume control
7. Signal link switch
8. Audio signal input terminal(PGM INPUT)

APPLICATION 1

Application in small to medium-sized venues such as cafeteria and stores

When wants to use 8 different sound sources to 8 different zones in small to medium venues such as café and stores, connect source devices to audio input terminal and compose the system. Not only broadcasting different sound sources to each 8 zone but by using Signal Link function of DPA-50E, broadcasting one input sound source of the first channel to all zones are both feasible.



Administrative building

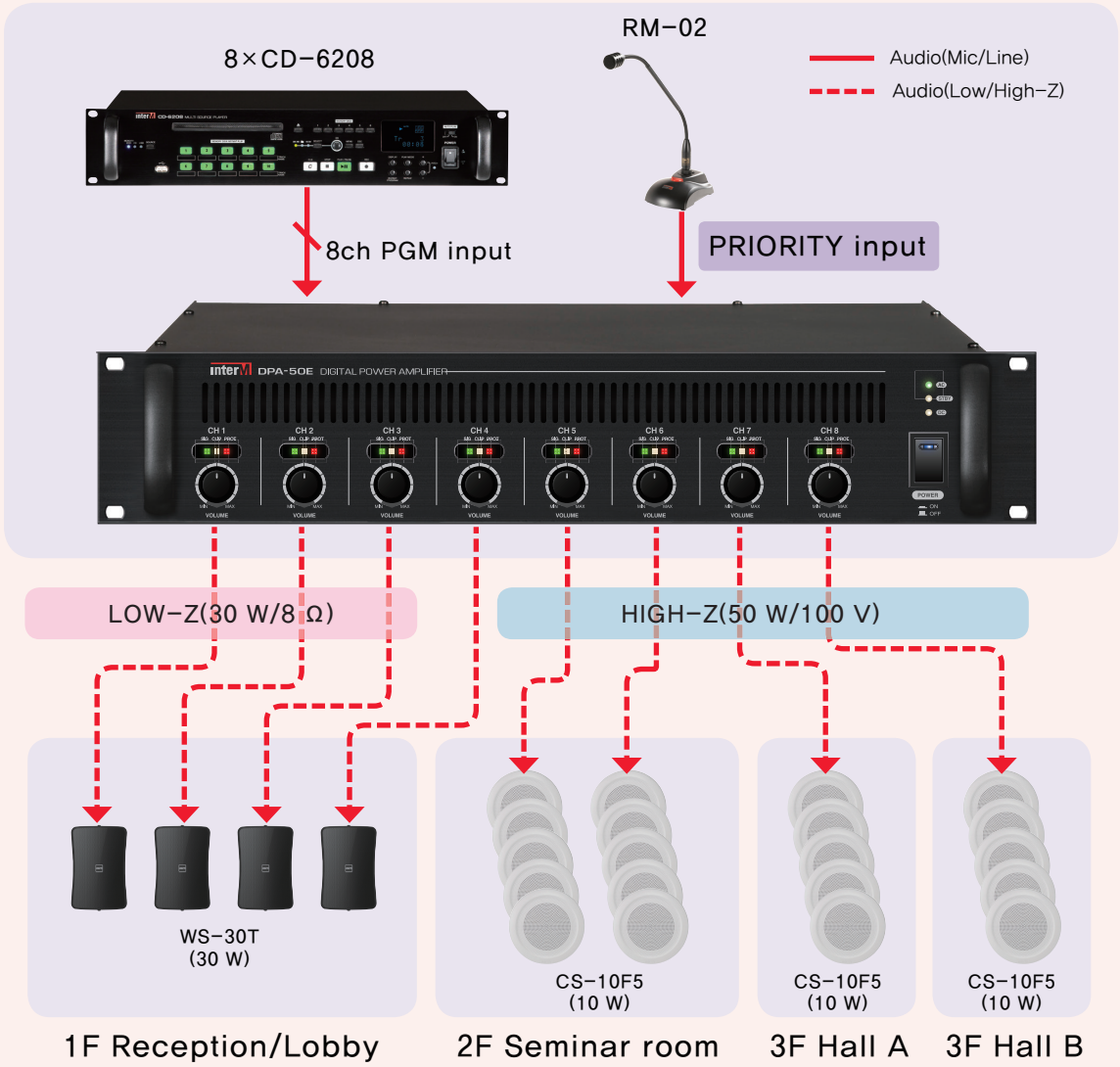

APPLICATION 2

Application of dispersion control system in large venues like school and department stores

This is dispersion system which is appropriate for large-sized venues like school and department store. By interlocking with Inter-M's NPX System, separate broadcasting and control are available. Use BGM control of NPX system installed in each zone to select sound sources and control the volume. Multi-channel amplifier, that controls each output zone, is essential when composing dispersion control system such as NPX system. DPA-50E will provide ultimate performance in large-sized dispersion control system.







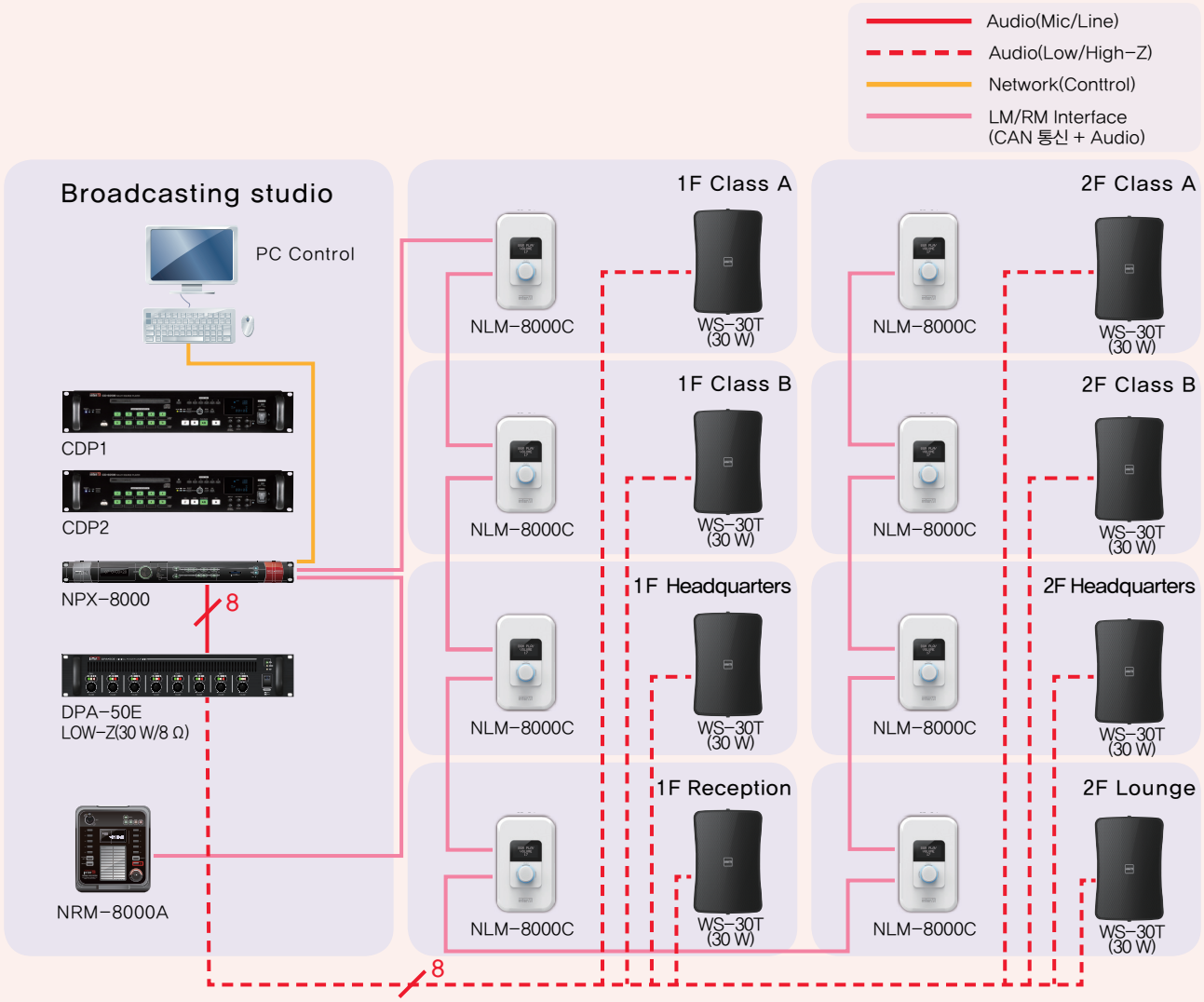

SPECIFICATIONS

		DPA-50E
Rated power (1kHz, THD 1 %)	70 V/100 V per channel	50 W
	4 Ω per channel	60 W
	8 Ω per channel	30 W
Gain	4 Ω/8 Ω	24 dB typ
	70 V	37 dB typ
	100 V	40 dB typ
Input impedance		10 kΩ min
Maximum input level		+20 dBu min
S/N	20 Hz-20 kHz, AES17	More than 80 dB
THD	20 Hz-20 kHz, 1/2 power	0.1 % max
Frequency response	1 W, 80 Hz-20 kHz, 4 Ω	+1 dB/-3 dB
Operating temperature		-10 ℃~+40 ℃
Power consumption		AC 220-240 V, 50/60 Hz
		DC 24 V

Inter-M Corp. (IMK)

719, Dobong-ro, Dobong-gu, Seoul, Korea
Overseas Sales Team
Tel_ +82-2-2289-8141~7 **Fax_** +82-2-2289-8149 **E-mail_** overseas@inter-m.com **www.inter-m.com**

※ Design and specification are subject to be changed for the improvement of product quality without pre notice.

2016. 1. V2