Features

- This product checks whether or not there is an audio input signal and allows control other equipment by using contact point to the extent of time selected among 3 stages. Applied Unbalanced 3.5ø, Balanced EURO input/output terminal.

- Connecting equipment
  PD-6359, PC, CD-6208 source device), PP-6213 (source device), DIB-6000

Name & function of each part

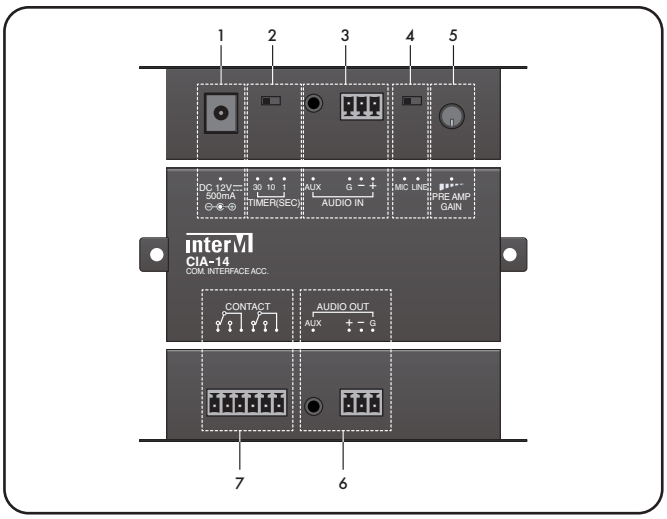

1. DC +12V Power Terminal
Power input terminal of CIA-14. Please connect DC +12V Adaptor.
※ The adapter must use a grounded plug for proper operation.

2. OUTPUT TIMER (SEC)
Upon a signal is input to AUDIO IN input terminal, then at OUTPUT CONTACT terminal output a contact point. If there is no signal at AUDIO IN input terminal, the contact is to be output at OUTPUT CONTACT terminal to the extent of time of set by switch and shut off.

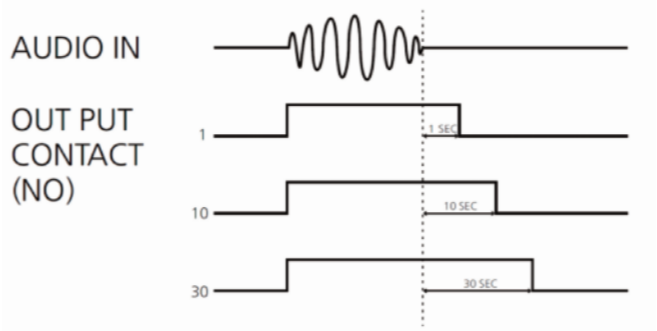

3. AUDIO IN
Audio signal input terminal to receive input from the PC (AUX) and the source device (EURO).

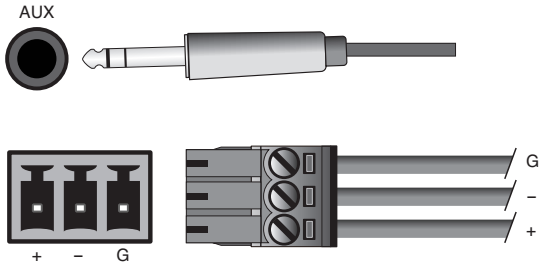

4. MIC/LINE input selection switch
The switch is selected upon input line signal & mic to AUDIO IN (EURO) terminal. The usage of input terminal by respective input select switch is different.
- MIC : Use ordinary dynamic or mic input
- LINE : Use LINE input

5. Volume Control Terminal
The level of signal input to AUDIO IN (EURO) can be adjusted. Turning clockwise increases the level.
※ The signal input to AUDIO IN (AUX) terminal is to be bypassed thus the signal level can't be adjusted.

6. AUDIO OUT
The terminal output the input signal.

7. OUTPUT CONTACT (contact point output)
- If the signal is input to AUDIO IN input terminal, the contact point is output at OUTPUT CONTACT terminal.
- NC normally is closed the contact point but is open upon there is no audio signal.
- NO normally is open the contact point but is closed upon there is no audio signal.

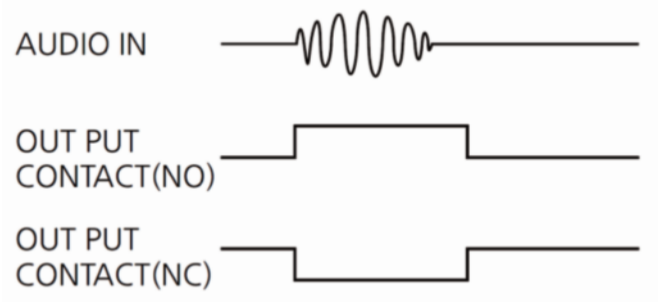

Ex) After connecting PD-6359 REMOTE IN terminal and a signal is input to AUDIO IN terminal at CIA-14 then PD-6359 is operated.

Application

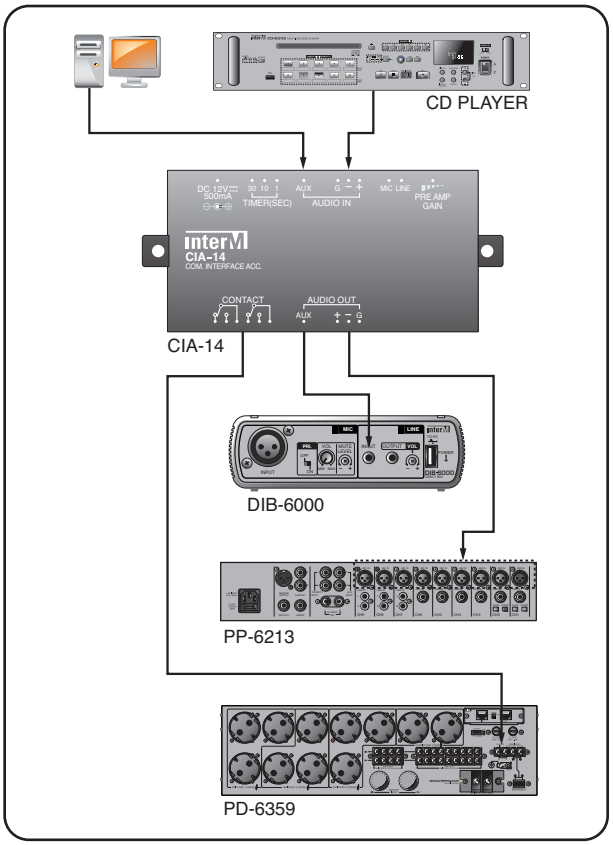

Specifications

		CIA-14
INPUT SENSITIVITY / IMPEDANCE	AUX (ø3.5 terminal)	0dBu ± 3dB / 10kΩ (UNBALANCE)
	MIC (EURO terminal)	-50dBu ~ -20dBu ± 3dB / 10kΩ(BALANCE)
	LINE (EURO terminal)	-26dBu ~ +4dBu ± 3dB / 10kΩ(BALANCE)
FREQUENCY RESPONSE(±3dB)	AUX (ø3.5 terminal)	50Hz~20kHz
	MIC (EURO terminal)	
	LINE (EURO terminal)	
THD(@1kHz. 20kHz LPF ON, AUX = -10dBu, MIC/LINE = 0dBu upon output)	AUX (ø3.5 terminal)	0.1%
	MIC (EURO terminal)	0.1%
	LINE (EURO terminal)	0.1%
S/N(@1kHz, 20kHz LPF, AUX = -10dBu, MIC/LINE = 0dBu upon output)	AUX (ø3.5 terminal)	more than 70dB
	MIC (EURO terminal)	more than 60dB
	LINE (EURO terminal)	more than 60dB
RESIDUAL NOISE	AUX (ø3.5 terminal)	less than -70dBu
	MIC (EURO terminal)	less than -60dBu
	LINE (EURO terminal)	less than -60dBu
REMOTE TIME		1 SEC
		10 SEC
		30 SEC
Operating temperature		-10°C ~ 40°C
Power Source		DC +12V (ADAPTER)
Weight (Set)		150.9g / 0.33lb
Dimensions (Set)		116(W) x 27.8(H) x 52(D)mm / 0.63(W) x 1.09(H) x 2.04(D)in
Accessory		EURO 3P x 2, EURO 6P x 1, ø3.5 CABLE x 1

※ Design and specification are subject to be changed for the improvement of product quality without pre notice.

Notice

1. Upon installing the module, make sure to insert after turn off the power of equipment.
2. Upon installing the module, make sure to confirm the supporting equipment

No. 141661