SERVICE MANUAL

MULTIPLE COMPACT DISC

PLAYER

CD-3500

interM

COMPANY	INTER.M	APPLICANT	REVISED NUMBER AND DATE			SIGN	DRAWN	CHECKED	APPROVED	NOTE
TYPE CODE			1.	4.	7.					
APPROVED DATE			2.	5.	8.					
			3.	6.	9.					

A-GND CHGND D-GND

SIZE	SHEET NO.	SCHEMATIC DIAGRAM
A2	1/1	MODEL : CDC-3500

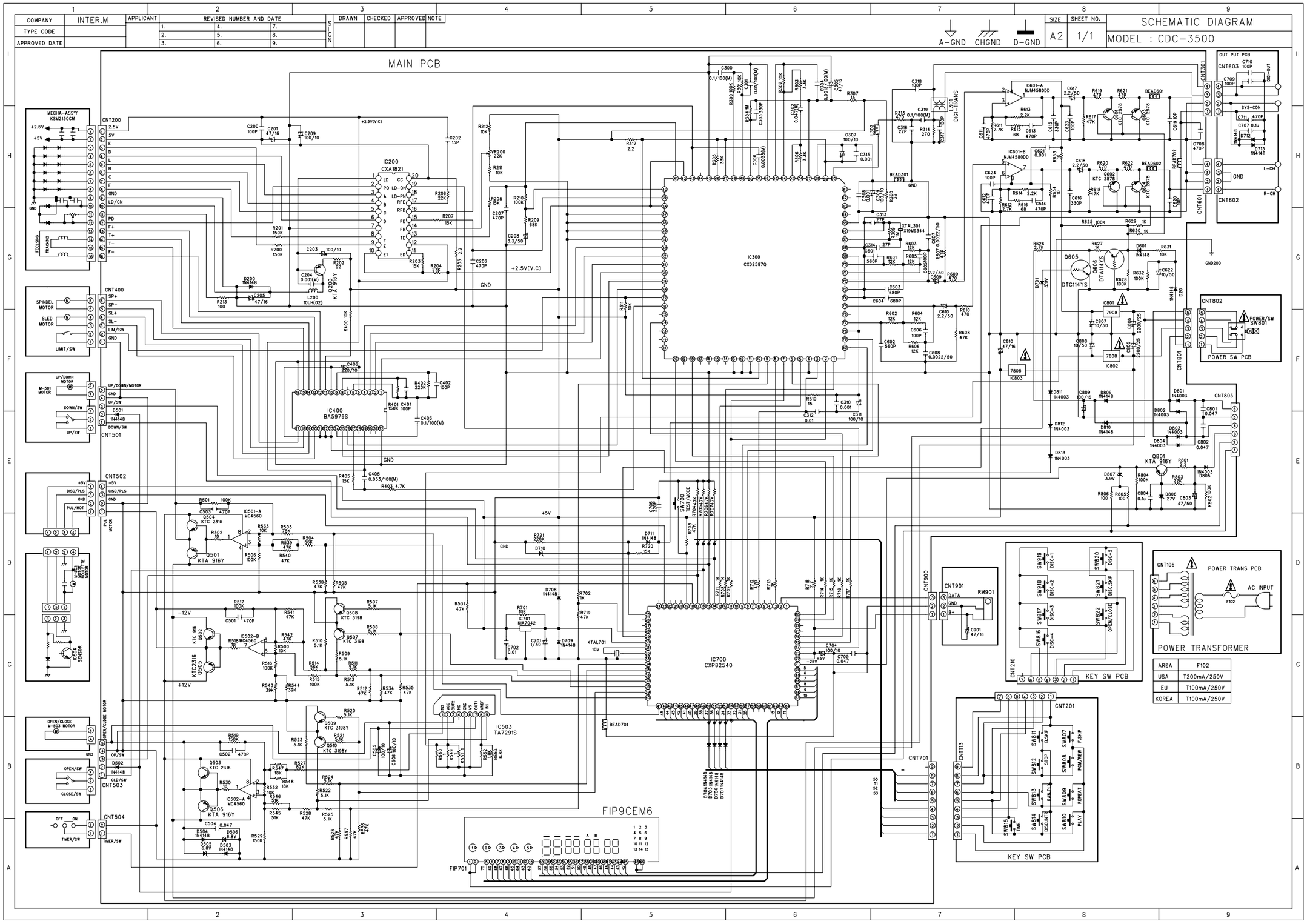

AREA	F102
USA	T200mA/250V
EU	T100mA/250V
KOREA	T100mA/250V

COMPANY	INTER.M	APPLICANT	REVISED NUMBER AND DATE			SIGN	DRAWN	CHECKED	APPROVED	NOTE	SHEET NO.	SCHEMATIC DIAGRAM
TYPE CODE			1.	4.	7.							MODEL : CD-3500
APPROVED DATE	03.12.03		2.	5.	8.							
			3.	6.	9.							
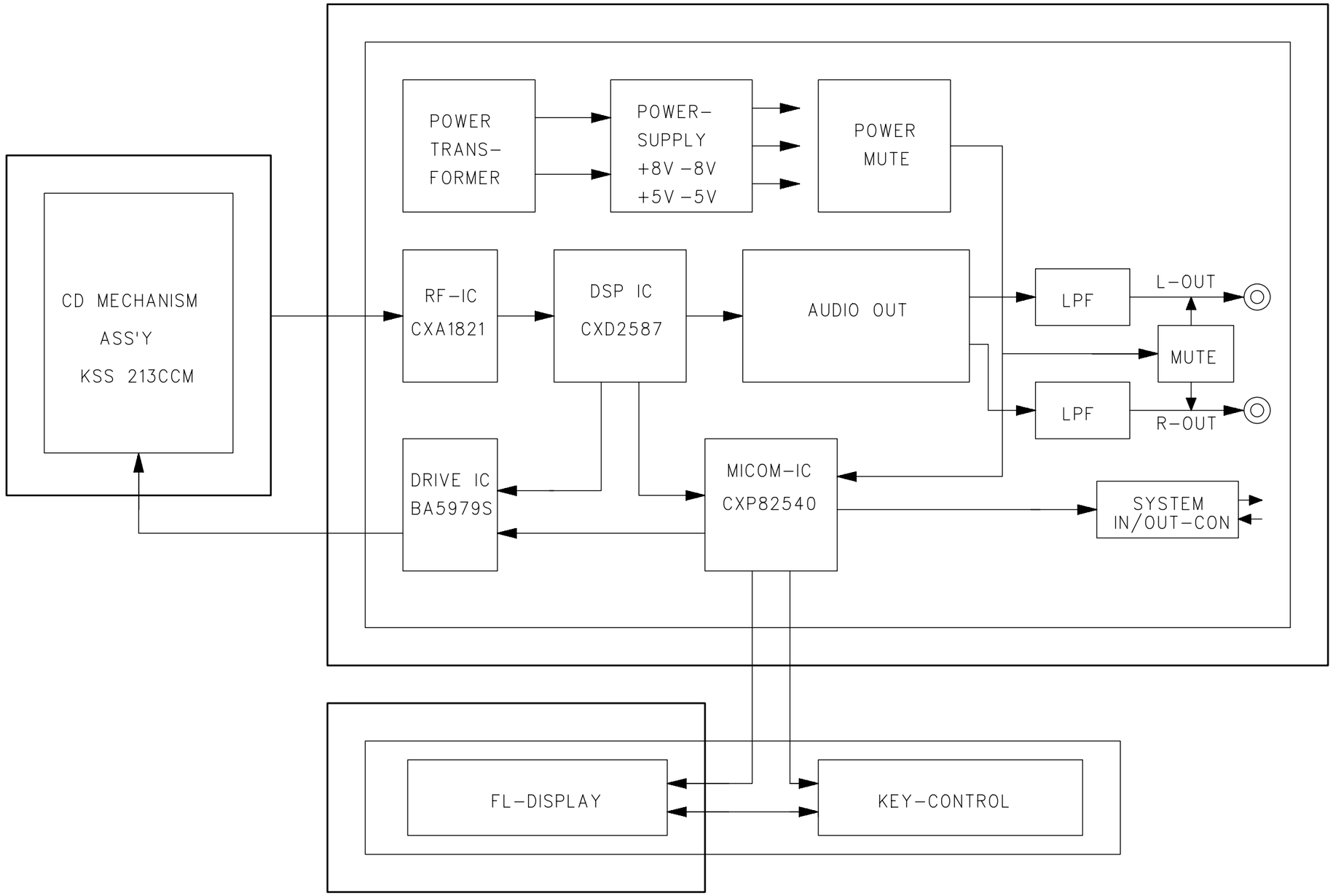
BLOCK DIAGRAM